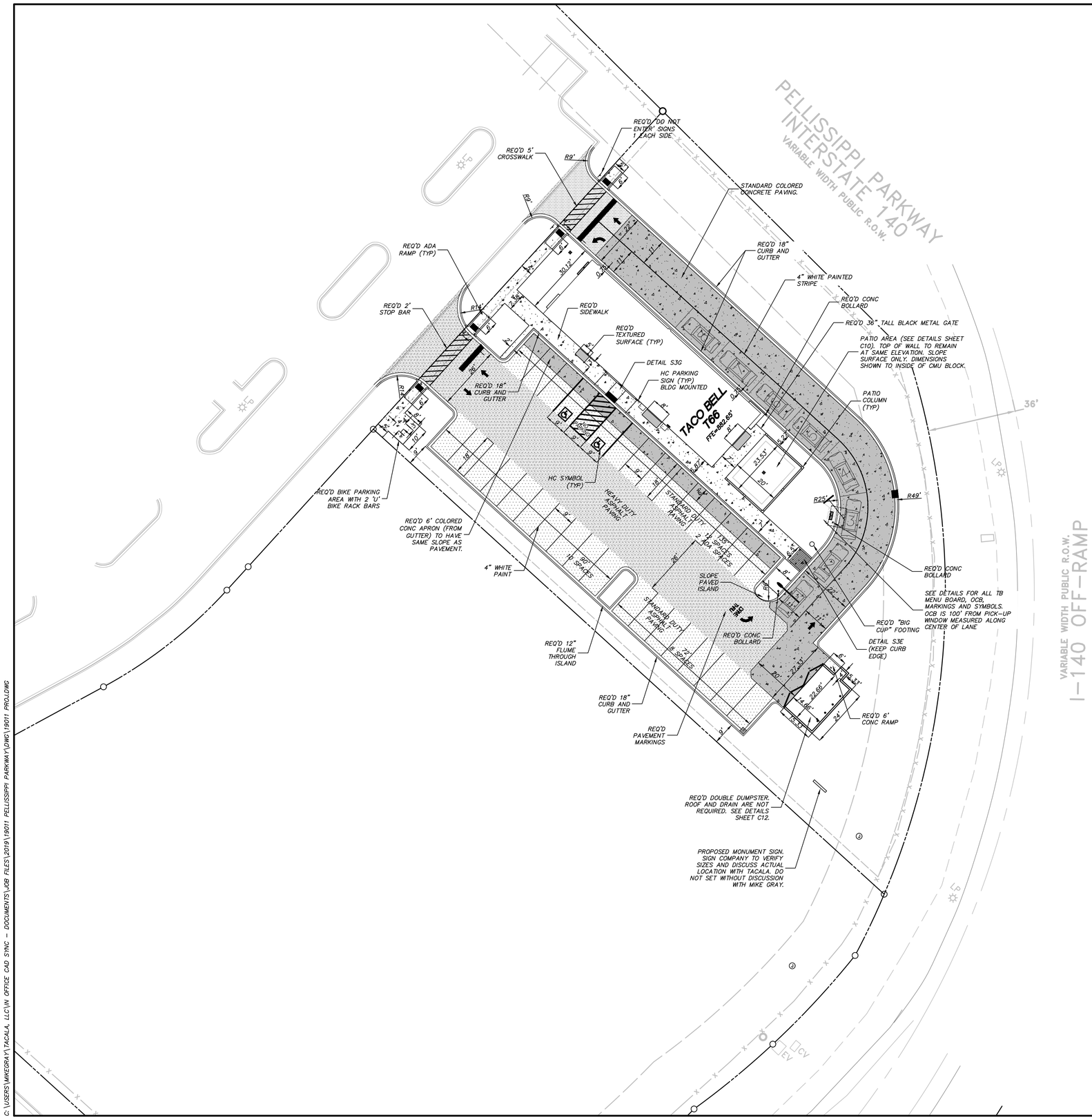

PAVEMENT LEGEND

- STD. DUTY CONCRETE PAVING
- COLORED CONCRETE PAVING
- STD. DUTY ASPHALT PAVING
- HEAVY DUTY ASPHALT PAVING

0 20' 30' 40'
SCALE: 1"=20'

SITE LEGEND

- PROPERTY LINE
- EASEMENT LINE
- SETBACK LINE
- CONCRETE SIDEWALK (SEE DETAIL)
- CONCRETE CURB AND GUTTER (SEE DETAIL)
- STOP BAR (PAVEMENT MARKING)
- TRAFFIC FLOW ARROW (PAVEMENT MARKING)
- "STOP" SIGN (R1-1)
- VAN — ACCESSIBLE STALL AND DESIGNATED VAN STALL
- A.D.A. STD ACCESSIBLE RAMP
- STORM SEWER GRATE

SITE SUMMARY

TOTAL LOT AREA	0.89 ACRES
TOTAL DISTURBED AREA	0.80 ACRES
PRE DEVELOPMENT	
TOTAL IMPERVIOUS AREA	0.00 ACRES
TOTAL PERVIOUS AREA	0.89 ACRES
POST DEVELOPMENT	
TOTAL IMPERVIOUS AREA	0.68 ACRES
TOTAL PERVIOUS AREA	0.21 ACRES

PARKING SUMMARY

TOTAL VEHICULAR USE AREA	16,697 SF
BUILDING	2,700 SF
MIN/MAX PER 1000 SF	6/12 =(16/32 SPACES)
PROVIDED STD. SPACES	30
PROVIDED ADA SPACES	2
PROVIDED BIKE SPACES	4

SITE NOTES

1. ALL WORK SHALL BE PERFORMED IN ACCORDANCE WITH THE PLANS AND SITE WORK SPECIFICATIONS AND SHALL COMPLY WITH APPLICABLE FEDERAL, STATE AND LOCAL CODES.
2. REFERENCE ARCHITECTURAL PLANS FOR ALL BUILDING DIMENSIONS AND ITEMS NOT SHOWN ON THESE PLANS.
3. TOPOGRAPHIC BOUNDARY SURVEY, PROPERTY LINES, LEGAL DESCRIPTION, EXISTING UTILITIES, SITE TOPOGRAPHY WITH SPOT ELEVATIONS, OUTSTANDING PHYSICAL FEATURES AND EXISTING STRUCTURE LOCATIONS WAS PROVIDED BY THE FOLLOWING COMPANY:

   SITE, INCORPORATED
   10215 TECHNOLOGY DRIVE, SUITE 304
   KNOXVILLE, TENNESSEE 37932
   PHONE: (865) 777-4160
4. ALL DIMENSIONS AND RADII ARE TO THE FACE OF CURB, UNLESS OTHERWISE NOTED. ALL DIMENSIONS SHOWN TO BUILDINGS ARE TO OUTSIDE FACE OF BUILDING.
5. ALL ACCESSIBLE PARKING SIGNS AND STRIPING SHALL BE IN ACCORDANCE WITH THE AMERICANS WITH DISABILITIES ACT (ADA) REQUIREMENTS AND APPLICABLE STATE CODES OR REQUIREMENTS.
6. ALL TRAFFIC SIGNS SHALL CONFORM TO THE MANUAL ON UNIFORM TRAFFIC CONTROL DEVICES (MUTCD) AND APPLICABLE STATE DOT REQUIREMENTS.
7. ALL STRIPED OR CURBED RADII SHALL BE 2.5' AT THE FACE OF CURB UNLESS OTHERWISE NOTED.
8. THE CONTRACTOR IS RESPONSIBLE FOR REPAIR OF ANY DAMAGE TO ANY EXISTING IMPROVEMENTS, ONSITE OR OFF SITE, SUCH AS PAVEMENT, UTILITIES, STORM DRAINAGE, ETC. THE REPAIR MUST BE APPROVED BY THE ENGINEER AND BE EQUAL OR BETTER THAN EXISTING CONDITIONS.
9. ALL PARKING LOT LIGHTING POLES, BASES, FIXTURES WITH LAMPS AND REQUIRED PAINT WILL BE INSTALLED BY THE GENERAL CONTRACTOR'S ELECTRICAL CONTRACTOR. THE ELECTRICAL CONTRACTOR SHALL PROVIDE THE OWNER A ONE-YEAR WARRANTY CERTIFICATE. ALL INCURRED COSTS FOR RECEIVING, UNWRAPPING OF FACTORY PAINTED POLES, STORAGE, LIABILITY AND WARRANTY LABOR SHALL BE INCLUDED IN THE INSTALLATION CONTRACT PRICE,
10. CONTRACTOR SHALL OBTAIN ALL PERMITS BEFORE CONSTRUCTION BEGINS.
11. SITE CONTRACTOR SHALL SUPPLY AS-BUILT PLANS INDICATING ALL CHANGES AND DEVIATIONS FROM THE DESIGN DOCUMENTS. SITE CONTRACTOR SHALL ALSO PROVIDE AS-BUILTS AS PART OF THE CONTRACT FOR STORM, SANITARY AND WATER LINES, IF REQUIRED BY THE GOVERNING AUTHORITY.
12. ANY DEVIATION FROM THESE PLANS MAY CAUSE THE WORK TO BE UNACCEPTABLE.
13. ANY UNANTICIPATED CONDITIONS ENCOUNTERED DURING THE CONSTRUCTION PROCESS SHALL BE IDENTIFIED TO THE OWNER/ENGINEER IMMEDIATELY.
14. ALL SITE CONCRETE SHALL BE 3,500 PSI 28 DAY COMPRESSIVE STRENGTH.
15. ALL CURB WITHIN THE DEVELOPMENT SHALL BE 6" HEADER CURB. CURB AND GUTTER, WHEN SHOWN IN PARKING LOTS, SHALL BE 18". ALL OTHER CURB TO BE 24" AND 30" IN R.O.W. UNLESS OTHERWISE SPECIFIED.
16. PARKING LOT STRIPING SHALL BE INCLUDED IN PAVING CONTRACTOR'S SCOPE OF WORK. STRIPING WILL BE ACCORDING TO OWNER'S SPECIFICATIONS. ALL STRIPING IS TO HAVE TWO (2) COATS OF PAINT (MIN).
17. THE CONTRACTOR IS RESPONSIBLE FOR OBTAINING ANY AND ALL OFF-SITE EASEMENTS NOT DELINEATED ON PLANS OR KNOWN OF AT TIME OF PLAN ISSUANCE.
18. THE SITE CONTRACTOR IS RESPONSIBLE FOR PROVIDING ALL WORK AND APPURTENANCES TO WITHIN 5' OF THE BUILDING. THIS INCLUDES TRANSFORMER AND DUMPSTER PADS AS WELL AS ALL UTILITY CONDUITS.
19. THE CONTRACTOR SHALL PROVIDE THE OWNER WITH A LIST OF SUB CONTRACTORS PRIOR TO COMMENCEMENT OF CONSTRUCTION ACTIVITIES.
20. CONTRACTOR TO INCLUDE CONCRETE BOLLARDS FOR PROTECTION OF BUILDING CORNERS, TRANSFORMERS, VAULTS, LIGHTING POLES, AND OTHER FIXTURES NEAR DRIVE ISLES AS SHOWN ON THIS PLAN.
21. CONTRACTOR SHALL MATCH EXISTING PAVEMENT IN GRADE AND ALIGNMENT.
22. ALL SITE CONCRETE SIDEWALKS SHALL BE FIVE FEET SIX INCHES (5.5') WIDE MINIMUM UNLESS OTHERWISE NOTED. SIDEWALK ADJACENT TO BUILDINGS SHALL BE SEVEN (7') FEET WIDE FOR THE T50 AND TY07 PROTOTYPES.
23. PARKING LOT STRIPING IS TO BE CLEARLY VISIBLE BEFORE FINAL ACCEPTANCE. FADED STRIPING IS UNACCEPTABLE. IF CONTRACTOR STRIPES WITHIN 7 DAYS OF ASPHALT PLACEMENT, A SECOND INSTALLATION SHALL BE APPLIED WITHIN 21 DAYS.
24. CONTRACTOR SHALL COORDINATE WITH OWNER TO PROVIDE EXCAVATION AND CONSTRUCTION OF POLE-MOUNTED SIGN BASE.
25. ALL GUTTER SECTIONS OF CURB AND GUTTER AND ALL CONCRETE APRONS IN PARKING STALLS SHALL HAVE THE SAME SLOPE AS THE PAVEMENT WITHIN THE PARKING LOT AS SHOWN ON THE GRADING PLAN. CONTRACTOR MUST EVALUATE GRADING PLAN PRIOR TO POURING THESE ITEMS.
26. ALL TRAFFIC CONTROL NECESSARY FOR COMPLETION OF ANY WORK ON THIS PROJECT SHALL BE THE RESPONSIBILITY OF THE GENERAL CONTRACTOR AND PRICE SHALL BE INCLUDED IN HIS BID.

11-A-19-UR

Revised: 10/25/2019

COLORED CONCRETE

FOR CONCRETE USED IN PARKING APRON, DUMPSTER ENCLOSURE APRON AND DRIVE THRU LANE:

CONCRETE STRENGTH – 4000 PSI
SLUMP – 3"-5"
COLOR – MIDNIGHT
PLANT MIXED ONLY
42LBS/CY

APPLY APC CURE AND SEAL CLEAR AFTER CONCRETE CURES AND WITHIN 24 HOURS. ALLOW SEALER TO DRY 72 HOURS BEFORE FOOT TRAFFIC. APPLY TINTED SEAL 48 HRS PRIOR TO TURNOVER DATE

REVISIONS
4/8/2019 RELEASE FOR REVIEW
10/14/2019 CITY REVIEW ADDRESSED

PLANNING FILE NUMBER – 11-A-19-UR

TACO BELL

TACO BELL RESTAURANT

1970 TOWN CENTER BLVD, KNOXVILLE, TN 37922
SITE #312654

TACALA
3750 CORPORATE WOODS DRIVE
VESTAVIA HILLS, AL 35242
205.443.9600
WWW.TACALA.COM

MICHAEL J. GRAY
REGISTERED ENGINEER
No. 111928
STATE OF TENNESSEE

JOB NO.: 19011
DWG NAME: 19011 PROJ

SITE PLAN

SHEET: C2

DATE: 10/24/19

C:\USERS\MIKEGRAY\TACALA, LLC\W OFFICE CAD SYNC - DOCUMENTS\JOB FILES\2019\19011 PELLISSIPPI PARKWAY\DWG\19011 PROJ.DWG

11-A-19-UR

Revised: 10/25/2019

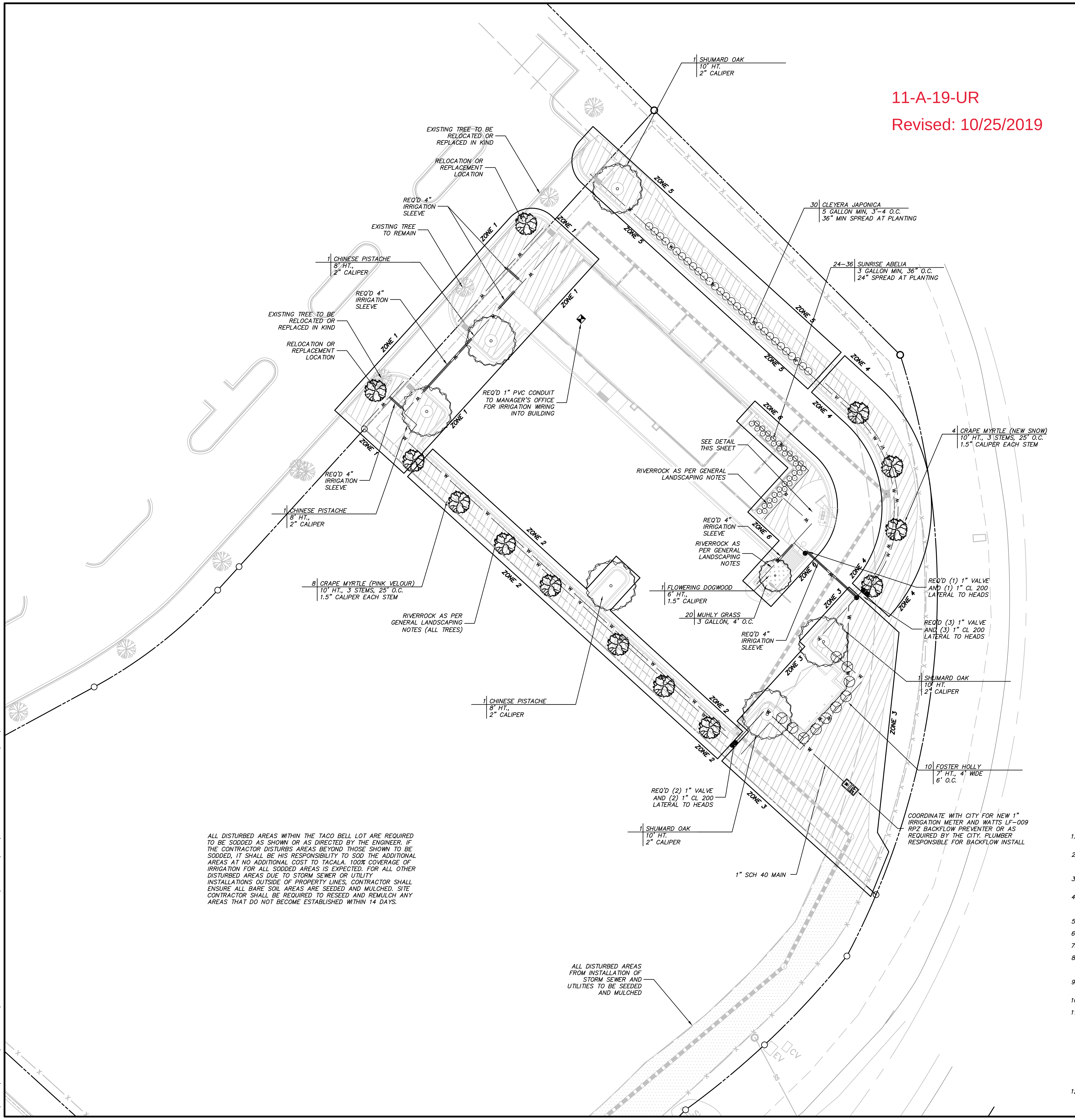

ALL DISTURBED AREAS WITHIN THE TACO BELL LOT ARE REQUIRED TO BE SODDED AS SHOWN OR AS DIRECTED BY THE ENGINEER. IF THE CONTRACTOR DISTURBS AREAS BEYOND THOSE SHOWN TO BE SODDED, IT SHALL BE HIS RESPONSIBILITY TO SOD THE ADDITIONAL AREAS AT NO ADDITIONAL COST TO TACALA. 100% COVERAGE OF IRRIGATION FOR ALL SODDED AREAS IS EXPECTED. FOR ALL OTHER DISTURBED AREAS DUE TO STORM SEWER OR UTILITY INSTALLATIONS OUTSIDE OF PROPERTY LINES, CONTRACTOR SHALL ENSURE ALL BARE SOIL AREAS ARE SEEDED AND MULCHED. SITE CONTRACTOR SHALL BE REQUIRED TO RESEED AND REMULCH ANY AREAS THAT DO NOT BECOME ESTABLISHED WITHIN 14 DAYS.

REGION 7 - SOUTHEAST

NO.	MATERIAL	QTY	SIZE	HGT.	SP
1	CHINESE HOLLY LLEX CORNUTA	PER PLAN	5 GAL		24"
2	SPANISH BAYONET YUCCA ALOIFOLIA	PER PLAN	5 GAL		
3	BLUE FESCUE FESTUCA GLAUCA	PER PLAN	1 GAL		36"
4	BOULDER (SEE NOTE) DESERT SAND COLOR 30"-36"	PER PLAN		N/A	
5	RIVERROCK (SEE NOTE)	PER PLAN		N/A	
6	INDIAN HAWTHORNE RAPHIOLEPIS INDICA 'PINK LADY'	PER PLAN	3 GAL		24"
7	BROWN METAL EDGING	PER PLAN			

IRRIGATION DETAILS

IRRIGATION VALVE

SPRAY HEAD (RADIUS AND DIRECTION PER IRRIGATION CONTRACTOR

RAINBIRD ESP-Me CONTROLLER (INSTALLED IN MANAGER'S OFFICE)

LANDSCAPING DETAILS

SEED (BERMUDA - TACALA MUST APPROVE VARIATION)

SOLID SOD (BERMUDA-TACALA MUST APPROVE VARIATION)

IRRIGATION SLEEVE DETAIL

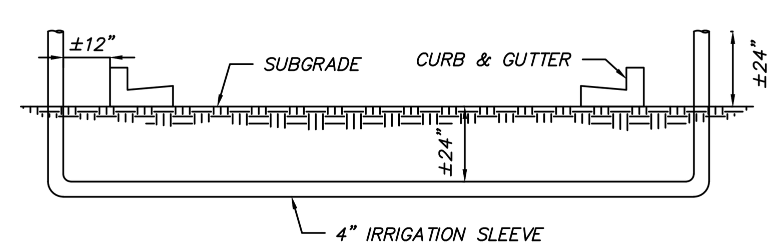

TREE PROTECTION ORDINANCE REQUIREMENT (8 TREES PER ACRE)	
LOT AREA	0.89 ACRES
TREES REQUIRED	7.12 = 8
TREES PROVIDED	
SHUMARD OAK	3
CHINESE PISTACHE	3
FOSTER HOLLY	10
FLOWERING DOGWOOD	1
TOTAL	17

GENERAL LANDSCAPING NOTES

1. LANDSCAPING/IRRIGATION CONTRACTOR SHALL COORDINATE ALL MATERIALS AND/OR ANY DEVIATIONS FROM THIS PLAN WITH OWNER BEFORE INSTALLATION.
2. CONTRACTOR SHALL USE DETAILS AS PROVIDED IN THIS PLAN SET UNLESS ADDITIONAL DETAILS ARE PROVIDED BY A LANDSCAPE ARCHITECT IF USED ON THE PROJECT.
3. CONTRACTOR SHALL COMPLY WITH ALL LOCAL CODES AND LANDSCAPING REQUIREMENTS.
4. CONTRACTOR SHALL PLANT SOD WITHIN 8'-10' OF ALL OUTSIDE CURBS AND ALL INTERIOR SPACES, OR AS NOTED ON THIS PLAN. SEED AND MULCH TO BE USED FOR ALL OTHER DISTURBED AREAS
5. CONTRACTOR SHALL ENSURE ALL PLANTINGS WILL BE ADEQUATELY IRRIGATED.
6. ALL PLANTS HAVE TO BE APPROVED BY THE OWNER/GOVERNING AUTHORITY.
7. SEE GENERAL NOTES ON LANDSCAPING DETAIL SHEET.
8. ALL AREAS TO BE SEEDED OR SODDED, SHALL RECEIVE 4" OF TOPSOIL AFTER COMPACTION. SOD AND SEED SHALL BE BERMUDA UNLESS LOCAL CONDITIONS REQUIRE OTHER. VARIATIONS FROM BERMUDA MUST BE APPROVED BY OWNER.
9. CONTRACTOR SHALL HAVE LANDSCAPING CONTRACTOR GROUP SHRUBS LISTED AS CHOICES ABOVE IN A MANNER TO PROVIDE AESTHETICALLY PLEASING RESULTS.
10. ALL RIVERROCK MUST BE FULLY WASHED PRIOR TO PLACEMENT IN BEDS.
11. ALL LANDSCAPING BEDS SHALL HAVE BROWN METAL EDGING AROUND THE ENTIRE BED EXCEPT FOR AGAINST CONCRETE CURB OR SIDEWALK. GREEN METAL EDGING WILL NOT BE ACCEPTED. EDGING SHALL EXTEND 1" ABOVE GRASS AND ALL STAKES SHALL BE TOWARDS RIVER ROCK. RIVER ROCK SHALL BE AT LEAST 1" BELOW HEIGHT OF EDGING. ABSOLUTELY NO ORGANIC MULCH OF ANY KIND IS ALLOWED. ALL BEDS TO HAVE A MINIMUM OF 3" SETTLED RIVER ROCK PLACED OVER A MINIMUM 4 OZ WEED FABRIC. FABRIC SHALL BE SECURED WITH 6" LANDSCAPING PINS. FABRIC SHALL BE PLACED OVER SHRUBS AND CUT TO FIT. FABRIC SHALL BE INSPECTED BY PHOTOGRAPH SUBMITTAL PRIOR TO RIVER ROCK PLACEMENT. CANOPY TREES SHALL HAVE A 6' LANDSCAPE DIAMETER RING AND CRAPE MYRTLES TO HAVE A 4' DIAMETER RING. RIVERROCK SHALL ALWAYS BE FULLY ENCOMPASSED IN METAL EDGING WHERE SURROUNDED BY SOD.
12. AS-BUILT IRRIGATION PLANS TO BE SUBMITTED TO OWNER AT TURNOVER OF PROJECT.

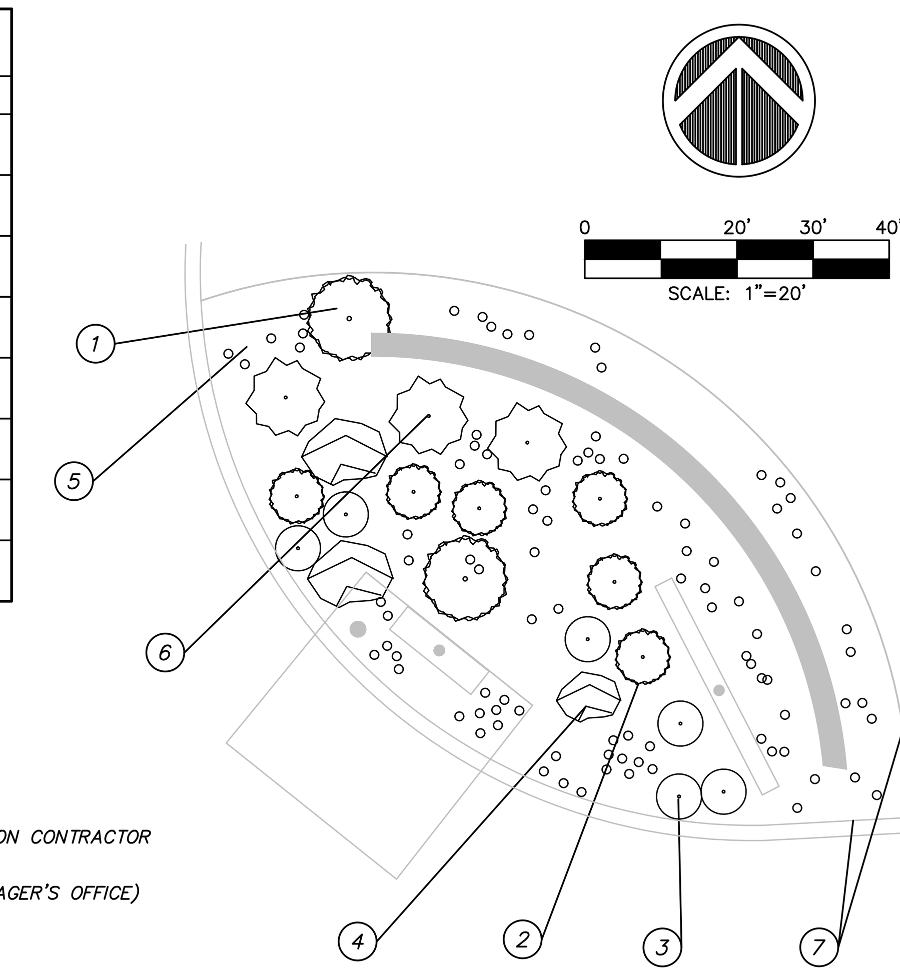

LANDSCAPING BOULDERS

CONTRACTOR SHALL PROVIDE NATURAL STONE BOULDERS 30"-36" IN SIZE THAT MATCH THE RIVERROCK. CONTRACTOR SHALL PROVIDE PHOTO SAMPLES PRIOR TO PLACEMENT. EXAMPLE PHOTOS SHALL BE PROVIDED TO THE CONTRACTOR BY THE OWNER UPON HIS REQUEST. EXAMPLE STONES ARE "BAJA CRESTA RED BOULDER" BY KRC ROCK BUT CONTRACTOR CAN CHOOSE ANY STONE THAT MEETS APPROVAL BY THE OWNER. RIVERROCK SAMPLE SHALL ALSO BE PROVIDED TO OWNER PRIOR TO PLACEMENT. RIVERROCK SHALL RANGE FROM 2"-5" WITH APPROXIMATE 30% 2", 40% 3-4" AND 30% 5". 5" SHALL BE MAXIMUM SIZE.

GENERAL IRRIGATION NOTES

1. IF IRRIGATION CONTRACTOR DESIRES TO DEVELOP HIS OWN IRRIGATION PLAN, INCLUDING LOCATION OF HEADS, VALVES, CONTROLLER, ZONES, PIPE SIZES, ACTUAL SLEEVE LOCATIONS, BACKFLOW PREVENTER, AND WIRING SCHEMATIC, THIS PLAN MUST BE SUBMITTED TO THE ENGINEER AND OWNER FOR APPROVAL.
2. POWER TO CONTROLLER BY ELECTRICAL CONTRACTOR.
3. IRRIGATION CONTROLLER SHALL BE PLACED WITHIN THE OFFICE AREA OF THE RESTAURANT WITH EXACT PLACEMENT AS PER ARCH. DRAWINGS.
4. COORDINATE CONDUIT INTO BUILDING BEFORE SLAB IS POURED FOR CONTROLLER WIRING.
5. DRAWING IS DIAGRAMMATIC IF SHOWN. ALL LINES TO BE PLACED BACK OF CURB.
6. ALL HEADS PLACED IN SHRUB BEDS WILL HAVE 12" POP-UPS UNLESS OTHERWISE NOTED.
7. USE VARIABLE ARC SPRAY HEADS WHEN NECESSARY.
8. THERE ARE TO BE (2) 4" PVC SLEEVES EACH TIME MAINLINE CROSSES HARDSCAPE.
9. THERE IS TO BE (1) 4" PVC SLEEVE WHEN THE LATERAL LINE CROSSES HARDSCAPE.
10. ALL SLEEVES TO BE INSTALLED AS PART OF GENERAL CONTRACTOR'S CONTRACT. VERIFY LOCATION WITH LANDSCAPE CONTRACTOR. ALL EQUIPMENT REQUIRED BUT NOT SPECIFIED ON THE DRAWINGS SHALL BE PROVIDED BY THE CONTRACTOR.
11. VERIFY TAP: IRRIGATION CONTRACTOR TO TEST WATER CONDITIONS AS THEY EXIST IMMEDIATELY DOWN STREAM FROM TAP: IF THEY DO NOT MEET DESIGN DEMANDS, NOTIFY LANDSCAPE ARCHITECT OR ENGINEER IMMEDIATELY OF EXISTING CONDITIONS.
12. MATCH PRECIPITATION RATES ON ALL CIRCUITS.
13. ALL WORK MUST COMPLY WITH LOCAL CODES.
14. NO ELECTRICAL CONNECTIONS SHALL BE MADE IN THE FIELD EXCEPT AT A VALVE CONTROL BOX OR ANOTHER VALVE BOX SPECIFICALLY FOR CONNECTIONS.
15. ANY DISCREPANCY BETWEEN THIS SHEET AND OTHERS IN THIS SET MUST BE REFERRED TO THE IRRIGATION CONSULTANT BY THE CONTRACTOR FOR CLARIFICATION BEFORE PRECEDING WITH THE WORK.
16. ALL 24 VOLT WIRE SHALL BE #12 UF/UL FOR COMMON WIRE, AND #14 UF/UL FOR CONTROL WIRES, DIRECT BURIAL, SOLID COPPER.CONTRACTOR TO BE RESPONSIBLE FOR PROPER COVERAGE OF AREAS TO BE WATERED. I.E. ADJUST HEADS WITH INSUFFICIENT COVERAGE DUE TO BLOCKAGE BY EXISTING OR PROPOSED SITE FEATURES.
17. CONTRACTOR TO REFER TO LANDSCAPE PLAN TO KEEP SPRINKLER EQUIPMENT AND ACCESSORY MATERIAL FROM INTERFERING WITH PROPER PLANTING, I.E. VERIFY ROOT BALL SIZE FOR PLANTING. CONTRACTOR SHALL PROVIDE EXPANSION COILS AT EACH WIRE. CONTRACTOR TO UTILIZE APPROPRIATE AUTOMATIC DRAIN DEVICE WHERE LOW HEAD DRAINAGE MAY OCCUR.
18. ALL MATERIAL TO BE SUPPLIED BY CONTRACTOR TO OWNER:
    A. TWO WRENCHES FOR DISASSEMBLING AND ADJUSTING EACH TYPE OF SPRINKLER HEADS AND VALVE SUPPLIED.
    B. TWO KEYS FOR EACH OF THE AUTOMATIC CONTROLLERS.
    C. TWO QUICK COUPLER KEYS WITH MATCHING HOSE SWIVELS. 24 VOLT WIRE SHALL BE COLOR CODED: COMMON- WHITE, CONTROL -RED.
19. CONTRACTOR TO ADD EXTENSION RISER TO POP-UP HEADS WHEN NEEDED FOR PROPER COVERAGE.
20. ELECTRIC VALVE CONTROL WIRE TO BE 14 GAUGE MINIMUM. IRRIGATION CONTRACTOR MUST PLACE ONE EXTRA "HOT" WIRE AND ONE EXTRA "COMMON" AT FURTHEST VALVE IN EACH DIRECTION FROM CLOCK.
21. ALL MAIN LINES SHALL BE INSTALLED A MAXIMUM OF 2' FROM THE BACK OF CURBS WHERE POSSIBLE. LATERAL LINES SHALL BE INSTALLED LIKEWISE WHERE POSSIBLE.
22. ACTUAL HEAD PLACEMENT IN PARKING LOT ISLANDS IS TO BE 18" FROM BACK OF CURB FOR SHRUB PLANTINGS AND 6" FROM BACK OF CURB FOR LAWNS.
23. THE CONTRACTOR SHALL ADJUST THE RADIUS AND ARC OF EACH HEAD TO MINIMIZE "OVERTHROW" AND TO ELIMINATE "DRY SPOTS".
24. THE CONTRACTOR SHALL BE RESPONSIBLE FOR THE SUPPLY AND INSTALLATION OF ADDITIONAL HEADS NEEDED TO COVER "DRY SPOTS" OR SLIGHT VARIATIONS FROM THE PLAN TO THE SITE UP TO FIVE % OF SPECIFIED HEAD TYPE.
25. THE LOCATION AND ARRANGEMENT OF THESE HEADS SHALL BE SUBJECT TO THE APPROVAL OF THE LANDSCAPE ARCHITECT OR ENGINEER.
26. DO NOT MAKE SUBSTITUTIONS: IF CONTRACTOR DESIRES TO MAKE SUBSTITUTIONS OF MATERIALS, SUFFICIENT DESCRIPTIVE LITERATURE AND MATERIAL SAMPLES MUST BE FURNISHED TO ESTABLISH THE MATERIAL AS AN EQUAL SUBSTITUTE. IN ADDITION, THE CONTRACTOR MUST STATE HIS REASONS FOR DESIRING SUBSTITUTE MATERIALS. SUBMIT THIS REQUEST AND INFORMATION TO LANDSCAPE ARCHITECT OR ENGINEER.

REVISIONS

0	4/8/2019 RELEASE FOR REVIEW
1	10/14/2019 CITY REVIEW ADDRESSED

PLANNING FILE NUMBER - 11-A-19-UR

TACO BELL RESTAURANT

1970 TOWN CENTER BLVD, KNOXVILLE, TN 37922

SITE #312654

TACALA
3750 CORPORATE WOODS DRIVE
VESTAVIA HILLS, AL 35242
205.443.9600
WWW.TACALA.COM

MICHAEL J. GRAY, REGISTERED ENGINEER, No. 111924, STATE OF TENNESSEE

JOB NO.: 19011

DWG NAME: 19011 PROJ

LANDSCAPING PLAN

SHEET: C6

DATE: 10/24/19

C:\USERS\MIKEGRAY\TACALA, LLC\IN OFFICE CAD SYNC - DOCUMENTS\JOB FILES\2019\19011 PELLISSIPPI PARKWAY\DWG\19011 PROJ.DWG

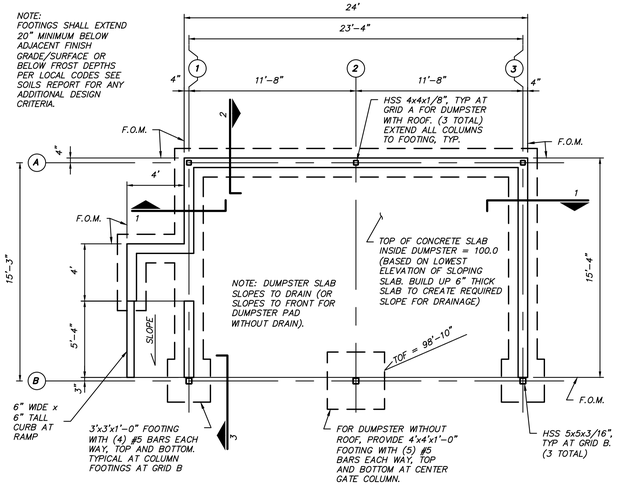

DUMPSTER FOUNDATION PLAN
SCALE = 1:50

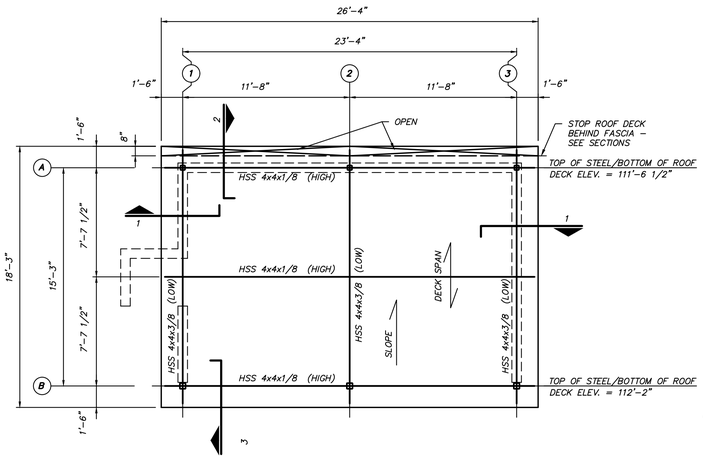

DUMPSTER ROOF FRAMING PLAN FOR DUMPSTER WITH ROOF (SEE DRAWINGS)
SCALE = 1:50

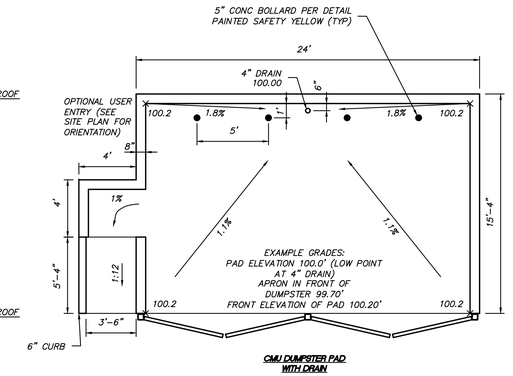

CMU DUMPSTER PAD WITH DRAIN

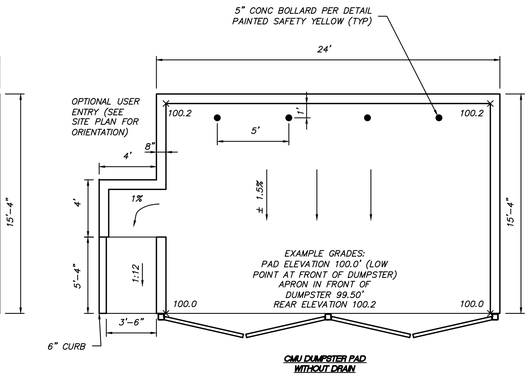

CMU DUMPSTER PAD WITHOUT DRAIN

DUMPSTER PAD DRAINAGE PLAN (SEE SITE PLAN FOR OPTIONAL USER ENTRY, ROOF, AND INTERIOR DRAIN REQUIREMENTS)
SCALE = 1:50

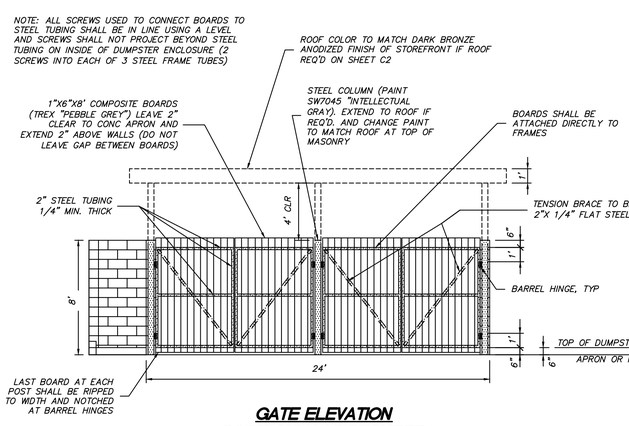

GATE ELEVATION (ROOF ONLY AS REQUIRED)
SCALE = 1:50

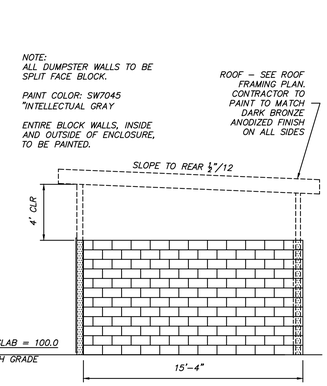

SIDE ELEVATION (ROOF ONLY AS REQUIRED
SCALE = 1:50

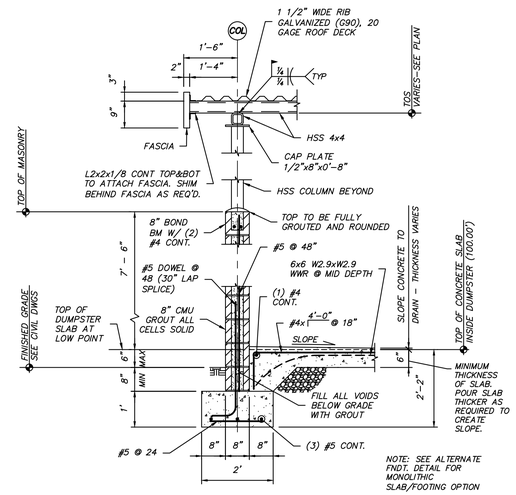

SECTION 1
SCALE = 1:20

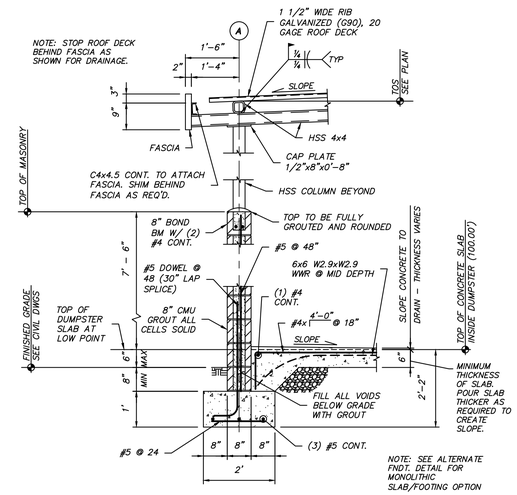

SECTION 2
SCALE = 1:20

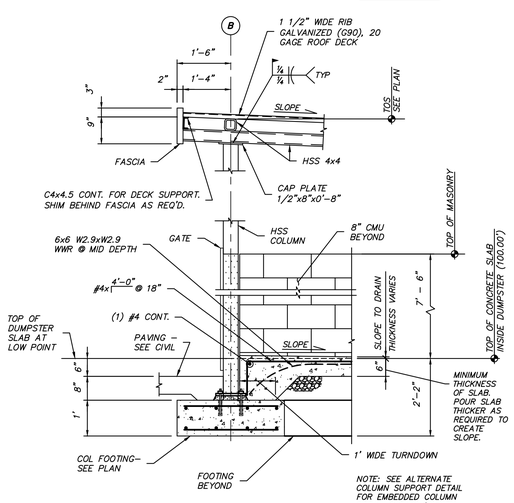

SECTION 3
SCALE = 1:20

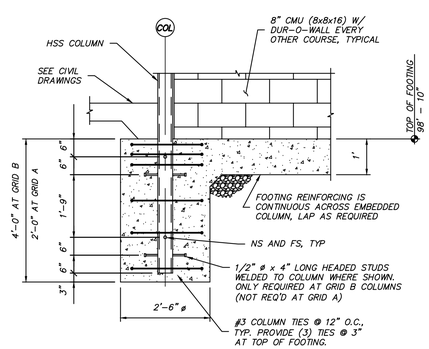

ALTERNATE COLUMN SUPPORT EMBEDDED COLUMN DETAIL
SCALE = 1:20

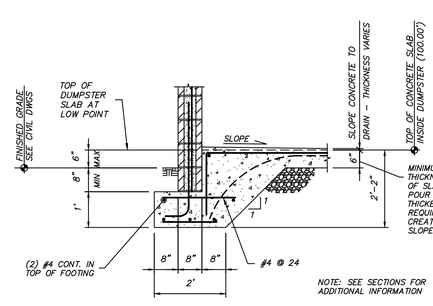

ALTERNATE FOUNDATION DETAIL WITH MONOLITHIC SLAB/FOOTING
SCALE = 1:20

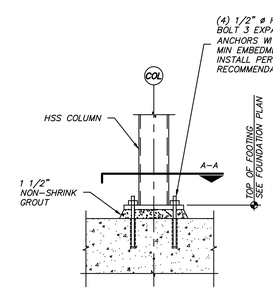

TYPICAL COLUMN BASE

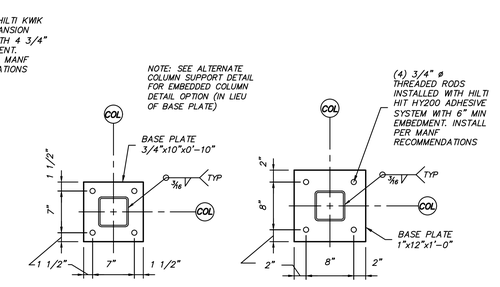

SECTION A-A

BASE PLATE AT CENTER GATE COLUMN WITHOUT ROOF

TYPICAL COLUMN BASE PLATE DETAIL
SCALE = 1:10

NOTES:
1. UNLESS SPECIFICALLY STATED ON SITE PLAN, ALL DUMPSTER SLABS SHALL BE ELEVATED 6" ABOVE PAVEMENT GRADE AT GATE.
2. CONTRACTOR TO PROVIDE METAL HOSE HANGER ALONG DUMPSTER WALL CLOSEST TO HOSE BIBB. HANGER TO BE MOUNTED TO THE WALL APPROXIMATELY 3' ABOVE SLAB.

CMU DUMPSTER

11-A-19-UR

Revised: 10/25/2019

REVISIONS
1 4/8/2019 RELEASE FOR REVIEW
2 10/14/2019 CITY REVIEW ADDRESSED

PLANNING FILE NUMBER - 11-A-19-UR

TACO BELL

TACO BELL RESTAURANT
1970 TOWN CENTER BLVD, KNOXVILLE, TN 37922
SITE #312654

TACALA
3750 CORPORATE WOODS DRIVE
VESTAVIA HILLS, AL 35242
205.443.9600
WWW.TACALA.COM

MICHAEL J. GRAY REGISTERED ENGINEER No. 111934 STATE OF TENNESSEE

JOB NO.: 19011
DWG NAME: 19011 PROJ

SITE DETAILS

SHEET: C12

DATE: 10/24/19

C:\USERS\MIKEGRAY\TACALA, LLC\W OFFICE CAD SYNC - DOCUMENTS\JOB FILES\2019\19011 PELLISSIPPI PARKWAY\DWG\19011 PROJ.DWG

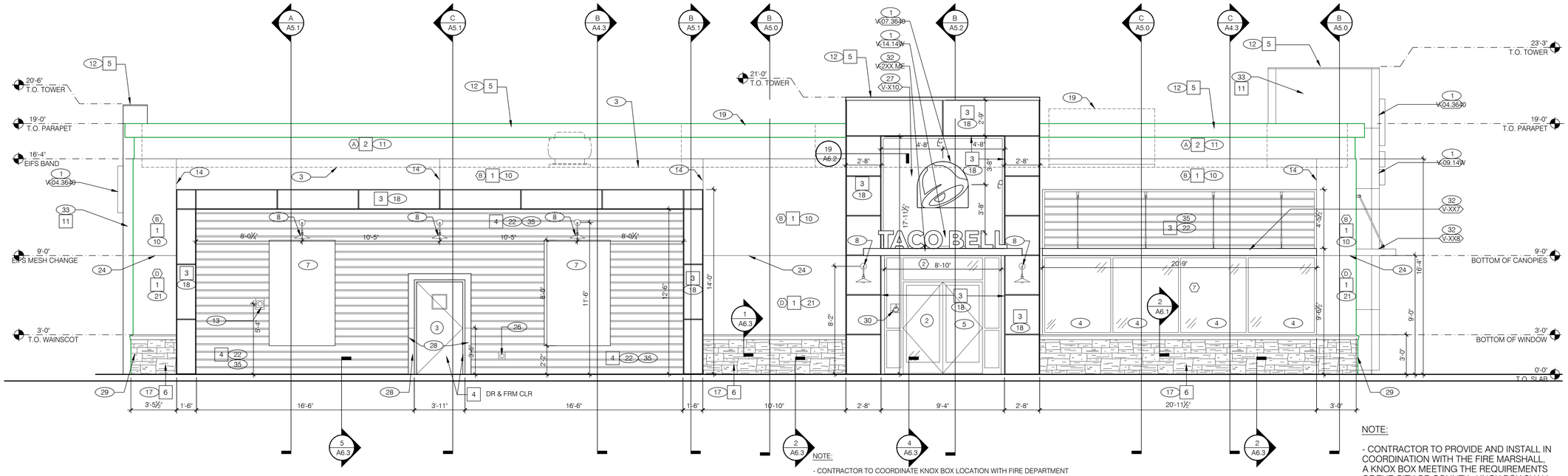

NOTE:

- CONTRACTOR TO COORDINATE KNOX BOX LOCATION WITH FIRE DEPARTMENT
- DIMENSIONS ARE TO EXTERIOR FINISH
- SEE DETAIL 7/A6.0 FOR CANOPY BRACING INFORMATION.

NOTE:

- CONTRACTOR TO PROVIDE AND INSTALL IN COORDINATION WITH THE FIRE MARSHALL, A KNOX BOX MEETING THE REQUIREMENTS OF THE CITY OR COUNTY. KNOX BOX SHALL BE INCLUDED IN THE BID PRICE OF THE GENERAL CONTRACTOR.

RIGHT SIDE ELEVATION 1/4"=1'-0" **A**

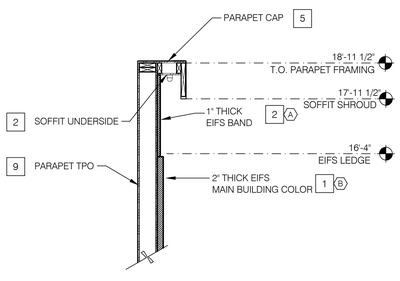

*USE THE EFIS COLOR FINISH COAT ON THE EXPOSED WOOD SURFACES IN THE LIGHT SOFFIT

EIFS THICKNESS COLOR TRANSITION N.T.S. **G**

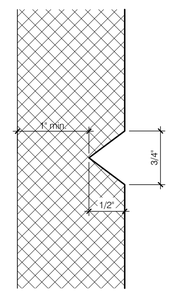

REVEAL DETAIL 1"=1'-0" **E**

V-XXX	QTY	ITEM DESCRIPTION	ELEC
V-04.3640	3	TACO BELL "BELL" LIGHTED SIGN (EXPLORER) 3'-10"W x 3'-6 "h	X
V-09.14W	3	TACO BELL "EXPLORER" LETTERS, LIGHTED 14" HIGH, WHITE, FLAT FACED	X
V-07.3640	1	TACO BELL "BELL" SIGN , FLAT WHITE PAINTED METAL (EXPLORER) 3'-10"W x 3'-6 "h	
V-14.14W	1	TACO BELL "EXPLORER" LETTERS, CANOPY EDGE MOUNTED 16" HIGH, WHITE	X
V-101.DT	1	*DRIVE THRU CANOPY 9'-2" X 4'-0"	X
V-2XX.ME	1	*SIDE ENTRY CANOPY 12'-0" x 3'-0"	X
V-XX7	1	*WALK-UP SIDE CANOPY 20'-9" x 3'-0"	X
V-XX8	1	*FRONT ENTRY CANOPY 19'- 0 1/2" x 3'-0"	X
V-XX9	1	*DRIVE-THRU SIDE CANOPY 18'-6" x 3'-0"	X
V-X10	1	G37 PAINT DAUBS EXPRESSION PANEL 98.5X90.5 E57350376	

* REQUIRES LIGHT FIXTURE(S). SEE ELECTRICAL.
* CANOPY COLOR TO MATCH STOREFRONT DARK BRONZE COLOR
*TURN BUCKLE COLOR ABOVE DRIVE-THRU CANOPY TO MATCH STOREFRONT COLOR

CANOPY & BLDG ACCENT SCHED N.T.S. **D**

(A) BASE THICKNESS - 1" THICK E.I.F.S.
(B) BASE THICKNESS - 2" THICK E.I.F.S.
(C) BASE THICKNESS - 1/2" THICK E.I.F.S. (NON-EXPOSED AREAS)
(D) BASE THICKNESS - 2" THICK E.I.F.S. WITH HIGH IMPACT MESH UP TO 9'-0" A.F.F. SEE DETAIL 2/A6.2

NOTE:

- REFER TO WALL LEGEND E / A1.0 FOR EXTERIOR WALL ASSEMBLIES LEGEND.
- DRAINABLE E.I.F.S. SYSTEM SHALL COMPLY WITH ALL STANDARDS, SPECS, DETAILS, TRIMS, & CRITERIA OF MFGR. SPECIFICATIONS FOR A DRAINABLE SYSTEM.

11-A-19-UR

Revised: 10/25/2019

E.I.F.S. LEGEND N.T.S. **B**

SYMBOL	AREA	MANUFACTURER	COLOR
1	MAIN BUILDING COLOR	SHERWIN WILLIAMS	SW 7045 "INTELLECTUAL GRAY"
2	WALL COLOR TOP BAND	SHERWIN WILLIAMS	SW 6831 "CLEMATIS"
3	REVEAL PANEL SYSTEM	JAMES HARDIE	PAINTED SW 7048 "URBANE BRONZE"
4	ARTISAN V-GROOVE SIDING	JAMES HARDIE	PAINTED SW 7030 "ANEW GRAY"
5	PARAPET CAP COLOR	SHERWIN WILLIMANS	SW 7048 "URBANE BRONZE"
6	BUILDING STONE STONE SILL / WATER TABLE STONE MORTAR	BORAL BORAL DAVIS COLORS	PROSTONE, COUNTRY LEDGESTONE, ECHO RIDGE #PRO- TRIMSTONE, GRAY TRUE-TONE - MC58 LIGHTEST OR EQUAL
7	STOREFRONT WINDOWS	CORAL	DARK BRONZE
8	PIPE BOLLARDS	STREET SMART	YELLOW - 1/4" THICK PLASTIC COVER (US.POSTMAN.COM) OR EQUAL
9	PARAPET BACK ROOFING	MULE HIDE	THE COLOR SHALL BE FACTORY COLORED "TAN." EQUAL ALTERNATE ALLOWED.
10	SOFFIT BREAK METAL	SHERWIN WILLIMANS	SW 7069 "IRON ORE"
11	TOWER PANEL SYSTEM	BY SIGN VENDOR	SEALED CORTEN STEEL PANELS

EXTERIOR FINISH SCHEDULE **H**

MISCELLANEOUS
A. SEE SHT A1.1 "WINDOW TYPES" FOR WINDOW ELEVATIONS.
B. SEE SCOPE OF WORK FOR RESPONSIBILITIES.
C. "HIGH IMPACT" MESH SHALL BE USED WHERE NOTED
D. THE PAINT COLORS SHOWN ARE COLOR REFERENCES FOR THE E.I.F.S. SUPPLIER.
E. E.I.F.S. TEXTURE TO BE 'MEDIUM' WITH PURE WHITE MARBLE AGGREGATE - NO QUARTZ.
F. PAINT ALL EXPOSED FOUNDATIONS U.N.O.

SEALERS (REFER TO SPECS):
A. SEALANT AT ALL WALL AND ROOF PENETRATIONS.
B. SEALANT AT ALL WINDOW AND DOOR FRAMES AT HEAD AND JAMB. DO NOT SEAL WEEPS @ WINDOWS SILLS.
C. APPLY NEOPRENE GASKET (CONT.) BETWEEN BUILDING & CANOPY/TRELLIS.

CRITICAL FINISH NOTES:

A. BUILDING FINISH OPENINGS THAT ARE DESIGNATED AS "CRITICAL" SHALL BE MAINTAINED TO PROVIDE FOR THE STANDARD INSTALLATION OF STANDARD SIGNAGE / BUILDING ELEMENTS. VERIFY DIMENSIONS WITH SIGN VENDOR.

B. IMPROPER INSTALLATION OF STONE WAINSCOT MAY RESULT IN GENERAL CONTRACTORS HAVING TO REMOVE AND REAPPLY ALL STONE MATERIAL.

GENERAL NOTES **F**

1. BUILDING SIGNAGE, SEE SCOPE OF WORK.
2. DRIVE THROUGH WINDOW. SEE SHEET A1.0 AND A1.1.
3. ROOF BEYOND.
4. STOREFRONT WINDOW SYSTEM, TYPICAL.
5. ENTRY DOOR, STOREFRONT SYSTEM.
6. SWITCH GEAR. PAINT OT MATCH WALL.
7. ART WORK PANEL BY VENDOR.
8. LIGHT SCONCE. CENTER JUNTION BOX IN MIDDLE OF REVEAL PANEL (CENTER OF BRACKET AT 8'-2").
9. ASSUME D/T LANE SURFACE IS 6" BELOW THE FINISH FLOOR. REFER TO GRADING AND SITE PLAN.
10. 2" DRAINABLE EIFS (TYP). SEE EIFS LEGEND THIS SHEET. (R-8 INSULATION)
11. 1" DRAINABLE EIFS (TYP). SEE EIFS LEGEND THIS SHEET. (R-8 INSULATION)
12. PARAPET COPING. USE MULE HIDE PRE-FINISHED EDGE TRIM. SEE DETAIL 2/A6.0.
13. CO2 FILLER VALVE AND COVER. SEE DETAIL 5/A6.2 SIM.
14. EIFS REVEAL JOINT.
15. GAS SERVICE. GAS LINE TO ENTER BUILDING AT 42" A.F.F.
16. WALL SHALL BE FINISHED PRIOR TO INSTALLATION OF SWITCHGEAR.
17. STONE WATERTABLE AND CAPSTONE: SEE DETAILS ON A4.1, A6.2, AND A6.3. SOLID GROUT ALL STONES TO SCRATCH PLASTER SURFACE WITH COLORED MORTAR.
18. JAMES HARIDE REVEAL PANEL SYSTEM
19. RTU LOCATION BEYOND.
20. BREAK METAL COVER OVER WOOD STUDS TO MATCH STOREFRONT. SEE 3, 4, 7 A6.1
21. 2" HIGH IMPACT EIFS WHERE SHOWN ON ELEVATIONS. SEE 2/A6.2. (R-8 INSULATION)
22. JAMES HARDIE ARTISAN V-GROOVE SIDING
23. STEEL BOLLARD, SEE DETAILS.
24. EIFS TRANSITION: HIGH IMPACT MESH TO STANDARD MESH.
25. PAINT DOOR AND FRAME SW7 046 ANONYMOUS
26. HOSE BIBB BOX. SEE DETAIL 8/A6.2
27. EXPRESSION PANEL ABOVE DOOR
28. 18 GA. PAINTED STEEL U-CHANNEL JAMB GUARD, 42" HIGH. PAINT TO MATCH FRAME.
29. STONE CORNER PER DETAIL 8/A6.2.
30. H.C. SIGNAGE.
31. OVERFLOW DRAIN - BRASS "LAMBS TOUNGE" SEAL ENTIRE PERIMETER AT EIFS.
32. ENTRY OR DRIVE THROUGH CANOPY. SEE DETAIL 7/A6.0 FOR BRACING DETAIL.
33. CORTEN STEEL PANELS BY SIGN VENDOR
34. 1/2" E.I.F.S. BEHIND TOWER PANELS
35. ALL AREAS BEHIND JAMES HARIDE ARTISAN V-GROOVE SIDING TO BE WATERPROOFED WITH BARRISEAL-R

KEY NOTES **D**

LANCE BLACK REGISTERED ARCHITECT AGRICULTURE No. 104970 STATE OF TENNESSEE

ISSUE FOR CONSTRUCTION
03/01/2019

REVISIONS		
no.	date	description

TACO BELL

TACO BELL
PELLISSIPPI PARKWAY
KNOXVILLE, TN

BLACK DESIGN ARCHITECTURE
2121 1ST AVENUE NORTH
SUITE 201
BIRMINGHAM, AL 35203
T. 205-868-8021
F. 205-868-8022
EMAIL: LB@BLACKDESIGNARCH.COM

black

SHEET TITLE: EXTERIOR ELEVATIONS
PROJECT NUMBER: 19-847
ISSUE DATE:
DRAWN BY: JS
CHECKED BY: LB

SHEET NUMBER
A4.0

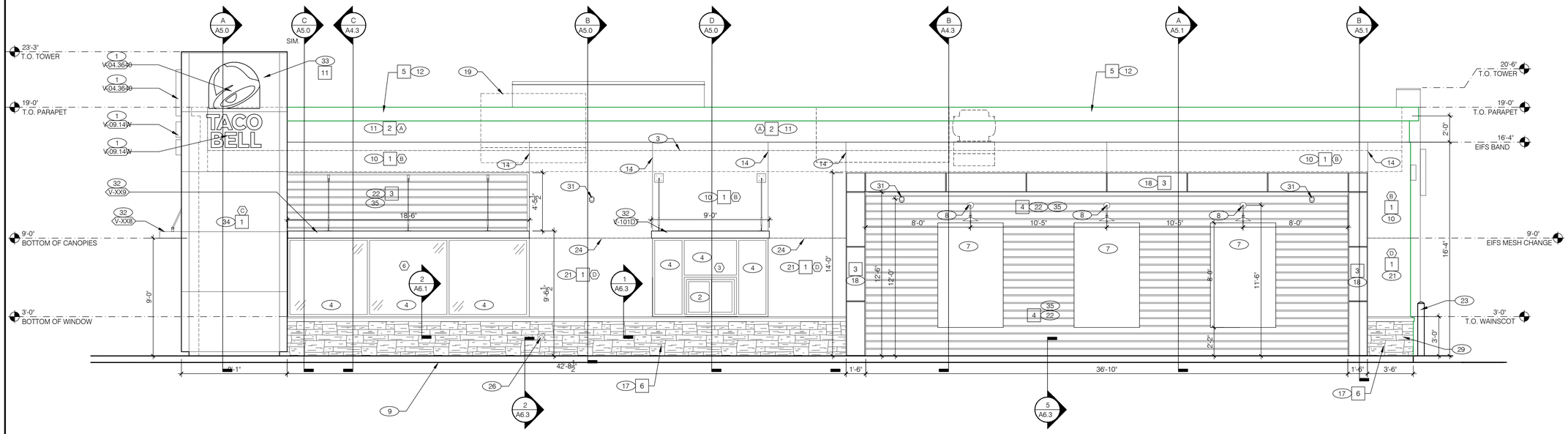

LEFT SIDE ELEVATION 1/4" = 1'-0" **A**

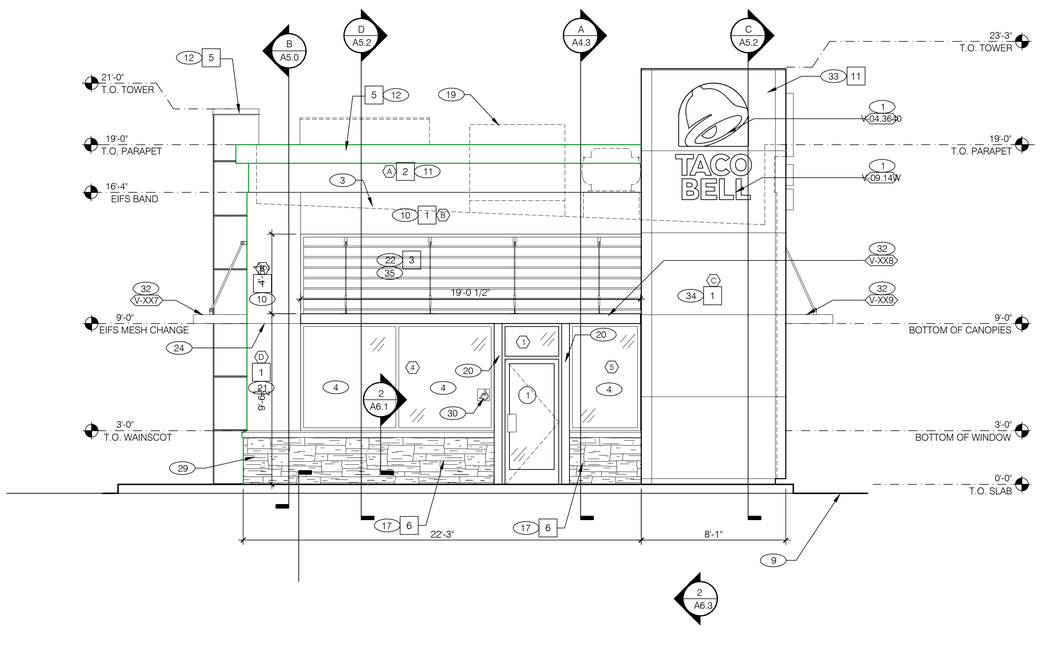

FRONT ELEVATION 1/4" = 1'-0" **C**

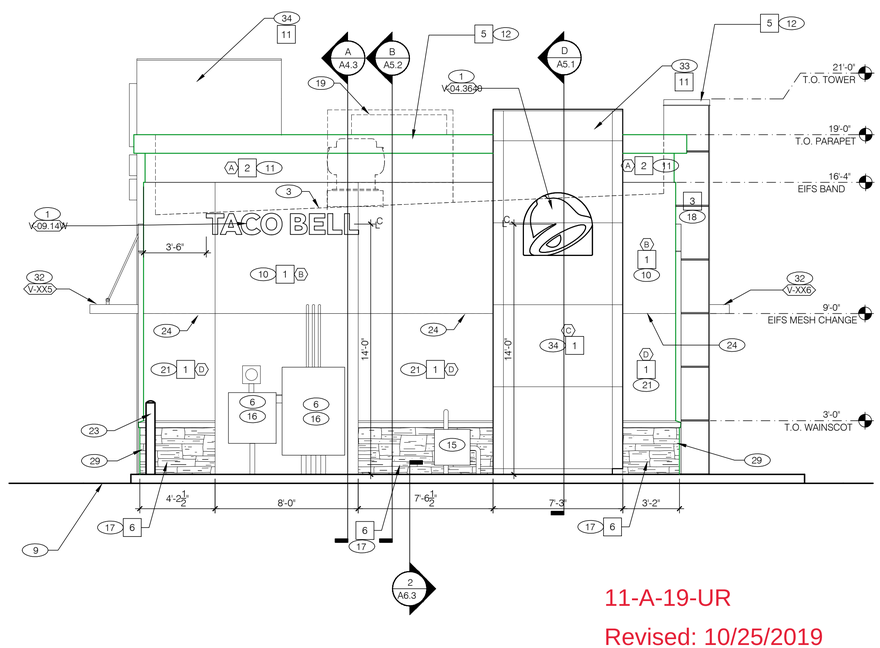

11-A-19-UR

Revised: 10/25/2019

REAR ELEVATION 1/4" = 1'-0" **B**

LANCE BLACK REGISTERED ARCHITECT AGRICULTURE CO-CHAIR 102070 STATE OF TENNESSEE

ISSUE FOR CONSTRUCTION
03/01/2019

REVISIONS		
no.	date	description

TACO BELL

TACO BELL

PELLISSIPPI PARKWAY
KNOXVILLE, TN

BLACK DESIGN ARCHITECTURE
2121 1ST AVENUE NORTH
SUITE 200
BIRMINGHAM, AL 35203
T: 205-858-8921
F: 205-858-8922
EMAIL: LB@BLACKDESIGNARCH.COM

black

SHEET TITLE: EXTERIOR ELEVATIONS
PROJECT NUMBER: 19-847
ISSUE DATE:
DRAWN BY: JS
CHECKED BY: LB

SHEET NUMBER
A4.1

11-A-19-UR

Revised: 10/25/2019

FRONT ELEVATION | B

RIGHT SIDE ELEVATION | A

REAR ELEVATION | D

LEFT SIDE ELEVATION | C

LANCE BLACK
REGISTERED ARCHITECT
AGRICULTURE
No. 104970
STATE OF TENNESSEE

ISSUE FOR CONSTRUCTION
03/01/2019

REVISIONS		
no.	date	description

TACO BELL

TACO BELL

PELLISSIPPI PARKWAY
KNOXVILLE, TN

BLACK DESIGN ARCHITECTURE
2121 1ST AVENUE NORTH
SUITE 202
BIRMINGHAM, AL 35203
T. 205-868-6921
F. 205-868-6922
EMAIL: LB@BLACKDESIGNARCH.COM

black

SHEET TITLE: COLORED EXTERIOR ELEVATIONS
PROJECT NUMBER: 19-847
ISSUE DATE:
DRAWN BY: JS
CHECKED BY: LB

SHEET NUMBER
A4.6

11-A-19-UR

Revised: 10/25/2019

Included below are images requested

Example Photo – Building

Example Photo – Dumpster Enclosure

11-A-19-UR

Revised: 10/25/2019

Example Photo – Site Light Pole and LED Fixture

11-A-19-UR

Revised: 10/25/2019

Example Photo – Monument Sign

Should you have any additional concerns, please let me know.

Sincerely,

Mike Gray, P.E.
Project Manager