Location Map

General Notes

1. The contractor is specifically cautioned that the location and/or elevation of existing utilities as shown on these plans is based on records and where possible measurements taken in the field. This information is not to be relied upon as being exact or complete. The contractor must call Tennessee One Call and any utility that does not subscribe to one call at least 72 hours before any excavation, to request exact field location of the utilities. It shall be the responsibility of the contractor to relocate all existing utilities which conflict with the proposed improvements shown on the plans.

2. Property is located in Knox County and is Zoned:
   RB = Front 35', Side 12', Rear 25'
   PR = Front not less than 15', Side not greater than 15', Rear not greater than 35'
   A = Front 50', Side 35', Rear 35'

3. Total Acreage = 9.4 Acres

4. Owner: West Park Baptist Church
   8833 Middlebrook Pike
   Knoxville, TN 37923
   Ph. 865-690-0031

Survey Notes

1. Survey by:
   Land Development Solutions
   310 Simmons Rd, Ste K
   Knoxville, TN 37922
   865-671-2281

2. Utility information is based on information obtained from the utility providers. Underground utility locations shown are taken from historical drawings and shall not be relied upon as exact locations. The contractor is responsible for determining the accuracy of this information.

Layout Notes

1. All dimensions to curb line reference face of curb - see detail.

2. See architectural drawings for building dimensions. All dimensions to building are approximate unless specifically noted as building layout points.

3. See Utility Plan for new and existing utility line locations. See Grading and Drainage Plan for new and existing storm drain locations.

Parking

West Park Baptist Church

13,764 sf auditorium area
1,637 sf chancel area
Total: 15,401 sf

Parking required per Knox County Zoning 3.50.07 = 15,401/30 = 513 Spaces
IBC 1106.1 requires 2% to be accessible = 11 Accessible Spaces

Current Parking Count: 882 Spaces including 32 H/C Spaces

Proposed Parking Count: 788 Spaces including 26 H/C Spaces
3 Please see sheet C-100 of the modular building plans submittal for detail parking modifications (attached to this submittal)

3 Previous MPC Reviews

The two "proposed building" additions shown on the plan were reviewed and approved by MPC. See 10-F-18-UR on 10/11/2018

3 Explanatory Narrative

The following is intended as a response to the Planning and Engineering staff comments enumerated in the letter of April 21, 2020.

1. The planning number, 5-O-20-UR, has been added to the title block, to the right.
2. This application is intended to be an addition to the use on review application 10-F-18-UR. The modular building is intended to be permanent. It is for additional office space for the church. The previous approval was for the addition of 7,650 square feet and a reconfiguration of the parking lot. Please see the parking notes, above. The modular building has been delivered to the site and will be set as soon as the site plan and plans review processes are complete. The other additions (of 5,547 s.f. and 2,088 s.f.) will not be executed until architectural design and drawings are complete, later in 2021. The modular building placement will allow the church to continue with its other expansion plans by meeting an immediate and pressing need.
3. The previous approval has been included by attachment.
4. The square footages have been noted on this site plan which is the same plan as presented for 10-F-18-UR with the modular building added and the parking re-calculated. Proposed additions are as follows;
   4.1. 5,547 s.f.
   4.2. 2,088 s.f.
   4.3. 2,128 s.f. (modular)
   4.4. 9,763 s.f. (total)
5. Sheet directory for this submittal
   5.1. C101 (revised 04/27/20)
   5.2. C101 (revised 09/21/18)(submitted as part of the 10-F-18-UR submittal) included for reference
   5.3. The drawings prepared for the building permit for the modular building as submitted to Knox County Codes is also included for reference.

20 10 0 20 40
1" = 20'

FALCONNIER
DESIGN COMPANY
4622 Chambliss Avenue
Knoxville, TN 37919
Phone 865.584.7868
Fax 865.584.3139
faldesco@gmail.com

© copyright 2020

DAMON A. FALCONNIER
AGRICULTURE
STATE OF TENNESSEE

LAND DEVELOPMENT SOLUTIONS
310 SIMMONS RD., SUITE K-KNOXVILLE, TENNESSEE 37922
PH. 865-671-2281

Site Layout Plan

WEST PARK BAPTIST CHURCH
8833 MIDDLEBROOK PIKE
KNOXVILLE, TN 37923

Revised: 4/27/20

3 5-O-20-UR
Use On Review

AS INSTRUMENTS OF SERVICE, THESE DRAWINGS AND THE DESIGN REPRESENTED BY THEM ARE THE PROPERTY OF DAMON A. FALCONNIER AND AS SUCH ARE PROTECTED BY STATE AND FEDERAL COPYRIGHT LAWS. REPRODUCTION OR USE OF THESE DRAWINGS OTHER THAN FOR THE PROJECT INTENDED WITHOUT WRITTEN CONSENT FROM DAMON A. FALCONNIER IS PROHIBITED. UNAUTHORIZED USE WILL BE SUBJECT TO LEGAL ACTION.

DRAWN BY:	CDB
CHECKED BY:	EJB
ISSUED:	8/27/18
REVISION(S):	
1 9/21/18	2 3/27/20
3 4/27/20	
FILE:	2018-2020

C101

CEDARBROOK OFFICE MODULAR BULDING

WEST PARK BAPTIST CHURCH

8835 MIDDLEBROOK PIKE
KNOXVILLE, TN 37923

FALCONNIER DESIGN CO.

DESIGN PROFESSIONALS

ARCHITECT:
FALCONNIER DESIGN CO.
4622 CHAMBLISS AVE.
KNOXVILLE, TN 37919
PH: 865.584.7868
FX: 865.584.3139
faldesco@gmail.com

ORIGINAL SURVEY:
LAND DEVELOPMENT SOLUTIONS
310 SIMMONS ROAD SUITE K
KNOXVILLE, TN 37922
PH: 865.671.2281

LOCATION PLAN

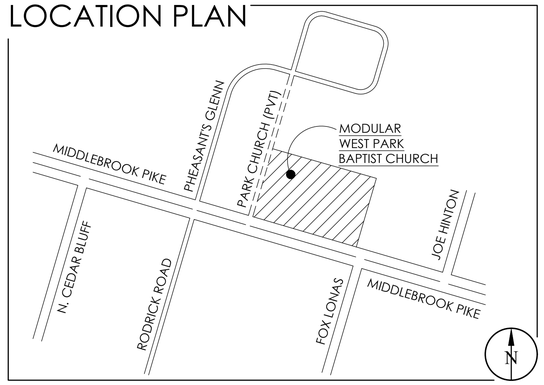

MATERIAL INDICATIONS

- CONCRETE
- MASONRY
- CRUSHED STONE
- BATT INSULATION
- FIBERGLASS SHINGLES
- GLUE LAMINATED SECTION
- WOOD SECTION

DRAWING INDEX

G-001	COVER SHEET & PROJECT DATA
G-100	SPECIFICATIONS
C-100	SITE LAYOUT PLAN
C-101	SITE UTILITES PLAN
A-100	FOUNDATION & DECK FRAMING PLAN
A-101	FLOOR PLAN AND LIFE SAFETY
A-200	ELEVATIONS
A-301	BUILDING SECTION & DETAILS
A-302	BUILDING SECTION

ISSUE RECORD

ISSUE	DATE	REV	DESCRIPTION	SHEET NO.
1	03/26/20	~	~	ALL
2	04/01/20	1	OWNER REVISIONS	ALL

DRAWING SYMBOLS

INDICATES SECTION DETAIL (1 / A0.0)

INDICATES ELEVATION (1 / A0.0)

| drawing title / scale — DRAWING TAG

INDICATES DRAWING NUMBER OR DETAIL REFERENCE (1 / A0.0)

TOP NUMBER INDICATES DRAWING NUMBER

BOTTOM NUMBER INDICATES SHEET NUMBER ON WHICH DRAWING APPEARS

ABBREVIATIONS

ABV	ABOVE
AFF	ABOVE FINISHED FLOOR
AP	ACCESS PANEL
ACOUST	ACOUSTICAL
ACT	ACOUSTICAL TILE
ADD	ADDENDUM
ADJ	ADJUSTABLE
A/C	AIR CONDITIONER (ING)
ACC	ACCESSIBLE
ALT	ALTERNATE
ALUM	ALUMINUM
ANC	ANCHOR (AGE)
AB	ANCHOR BOLT
ANOD	ANODIZED
APPROX	APPROXIMATE
ARCH	ARCHITECT (URAL)
AD	AREA DRAIN
ASSEM	ASSEMBLY (IES)
AUTO	AUTOMATIC
BS	BACKSPLASH
BSMT	BASEMENT
BM	BEAM
BRG	BEARING
BETW	BETWEEN
BVL	BEVEL (ED)
BIT	BITUMINOUS
BLK	BLOCK
BLKG	BLOCKING
BD	BOARD
BOT	BOTTOM
BR	BRUSH (ED)
BLDG	BUILDING
BUR	BUILT UP ROOFING
BBD	BULLETIN BOARD
CABT	CABINET
CPT	CARPET (ED)
CI	CAST IRON
CB	CATCH BASIN
CLG	CEILING
CEM	CEMENT
CTR	CENTER
CL	CENTER LINE
CER	CERAMIC
CT	CERAMIC TILE
CHAM	CHAMFER
CHAN	CHANNEL
CIR	CIRCLE
CIRC	CIRCUMFERENCE
CO	CLEAN OUT
CLR	CLEAR (ANCE)
CLO	CLOSET
CTD	COATED
CR	COLD ROLLED
COL	COLUMN
COM	COMMON
COMP	COMPRESS (ED, ION, IBLE)
CRT	COMPUTER MONITOR
CONC	CONCRETE
CMU	CONCRETE MASONRY UNIT
COND	CONDENSER
CONST	CONSTRUCTION
CONT	CONTINUE (OUS)
CONTR	CONTRACTOR
CJ	CONTROL JOINT
CONV	CONVENTIONAL
COORD	COORDINATE (ION)
CG	CORNER GUARD
CORRUG	CORRUGATED
CS	COUNTER SINK
CU.FT.	CUBIC FOOT/FEET
CU.YD.	CUBIC YARD
DL	DEAD LOAD
DEMO	DEMOLISH (TION)
DEPT	DEPARTMENT
DES	DESIGN
DET	DETAIL
DIAG	DIAGONAL
DIA	DIAMETER
DIM	DIMENSION
DW	DISH WASHER
DISP	DISPOSAL
DIV	DIVISION
DR	DOOR
DBL	DOUBLE
DH	DOUBLE HUNG
DN	DOWN
DS	DOWNSPOUT
DWR	DRAWER
DWG	DRAWING
DF	DRINKING FOUNTAIN
D	DRYER
DUR	DURATION
EA	EACH
EF	EACH FACE
EW	EACH WAY
E	EAST
EIFS	EXTERIOR INSULATION & FINISH SYSTEM
ELEC	ELECTRIC (AL)
EWC	ELECTRIC WATER COOLER
ELEV	ELEVATION
EMER	EMERGENCY
ENCL	ENCLOSURE
EPDM	ETHYLENE PROPYLENE DIENE MONOMER
EQ	EQUAL
EQUIP	EQUIPMENT
EST	ESTIMATE
EX	EXAMPLE
EXH	EXHAUST
EXIST	EXISTING
EXPAN	EXPANSION
EB	EXPANSION BOLT
EJ	EXPANSION JOINT
EXP	EXPOSED
EXT	EXTERIOR
ETR	EXISTING TO REMAIN
FIN	FINISH (ED)
FFE	FINISHED FLOOR ELEVATION
FA	FIRE ALARM/FRESH AIR
FE	FIRE EXTINGUISHER
FEC	FIRE EXTINGUISHER CABINET
FHC	FIRE HOSE CABINET
FP	FIREPLACE
FR	FIRE RETARDANT
FIXT	FIXTURE
FLASH'G	FLASHING
FLEX	FLEXIBLE
FLR	FLOOR (ING)
FD	FLOOR DRAIN
FLUOR	FLUORESCENT
FT	FOOT/FEET
FTG	FOOTING
FOUND	FOUNDATION
FR	FRAME/FRENCH
FS	FULL SIZE
FUR	FURRED (ING)
FUT	FUTURE
GA	GAGE/GAUGE
GALV	GALVANIZED
GEN	GENERAL
GC	GENERAL CONTRACTOR
GL	GLASS/GLAZING
GB	GRAB BAR
GD	GRADE (ING)
GVL	GRAVEL
GND	GROUND
GYP	GYPSUM
GPBD	GYPSUM BOARD
HDW	HARDWARE
HDR	HEADER
HTG	HEATING
HVAC	HTG, VENT, AIR. COND.
HYD	HYDRANT
HD	HEAVY DUTY
HGT	HEIGHT
H	HIGH
HM	HOLLOW METAL
HORIZ	HORIZONTAL
HB	HOSE BIBB
HR	HOUR
INCL	INCLUDE (D)(ING)
ID	INSIDE DIA./DIMENSION
INSUL	INSULATE (D)(ING)
INT	INTERIOR
INTER	INTERMEDIATE
INV	INVERT
JAN	JANITOR
JC	JANITOR CLOSET
JT	JOINT
JST	JOIST
KIT	KITCHEN
KO	KNOCK OUT
LBL	LABEL
LAB	LABORATORY
LB	LAG BOLT
LAM	LAMINATE (D)
LG	LARGE
LAUND	LAUNDRY
LT	LAUNDRY TUB
LAV	LAVATORY
LH	LEFT HAND
LEV	LEVEL
LTWT	LIGHTWEIGHT
LIM	LIMITING
LIN	LINEN
LTL	LINTEL
LL	LIVE LOAD
LKR	LOCKER
LLH	LONG LEG HORIZONTAL
LLV	LONG LEG VERTICAL
FR	FRAME/FRENCH
FS	FULL SIZE
FUR	FURRED (ING)
FUT	FUTURE
MH	MANHOLE
MFR	MANUFACTURE (R)
MAS	MASONRY
MO	MASONRY OPENING
MTL	MATERIAL
MAX	MAXIMUM
MECH	MECHANICAL
MC	MEDICINE CABINET
MEM	MEMBER
MET	METAL
MT	METAL THRESHOLD
MM	MILLIMETER
MWK	MILLWORK
MIN	MINIMUM
MIR	MIRROR
MISC	MISCELLANEOUS
MOD	MODULAR
MLD	MOLDING
MTD	MOUNTED
MOV	MOVABLE
MUL	MULLION
MTC	MUSIC/MACH TRANS CLASS
NAT	NATURAL
NOM	NOMINAL
NONCOMB	NONCOMBUSTIBLE
N	NORTH
NIC	NOT IN CONTRACT
NTS	NOT TO SCALE
NO or #	NUMBER
OC	ON CENTER (S)
OPNG	OPENING
OPP	OPPOSITE
OD	OUTSIDE DIAMETER
OA	OVERALL
OFD	OVERFLOW DRAIN
OH	OVERHEAD/OVERHANG
OZ	OUNCE
PNT	PAINT (ED)
PR	PAIR
PNL	PANEL
PAR	PARAPET
PART	PARTIAL
PTN	PARTITION
PVMT	PAVEMENT
PERIM	PERIMETER
PLAS	PLASTER
PLAM	PASTIC LAMINATE
PL	PLATE
PLYWD	PLYWOOD
PVC	POLYVINYL CHLORIDE
PCF	POUNDS PER CUBIC FOOT
PLF	POUNDS PER LINEAR FOOT
PSF	POUNDS PER SQUARE FOOT
PSI	POUNDS PER SQUARE INCH
PC	PRECAST CONCRETE
PREFAB	PREFABRICATED
PREENG	PREENGINEERED
PSC	PRESTRESSED CONCRETE
PT	PRESSURE TREATED
QT	QUARRY TILE
QTR	QUARTER
RAD	RADIUS
RL	RAINWATER LEADER
REF	REFERENCE/REFER
REFL	REFLECTED
REFR	REFRIGERATOR (ED)
REG	REGULAR
REINF	REINFORCE (D)(ING)
REQ'D	REQUIRED
RESIL	RESILIANT
RSFL	RESILIANT SHEET FLOORING
RET	RETURN
RA	RETURN AIR
REV	REVISION (S)/REVISED
RH	RIGHT HAND
R	RISER
RD	ROOF DRAIN
RM	ROOM
RO	ROUGH OPENING
RB	RUBBER BASE
RT	RUBBER TILE
SCHED	SCHEDULE
SECT	SECTION
SEP	SEPARATE
SERV	SERVICE
SS	SERVICE SINK
SHT	SHEET
SH	SHELF (VING)/SINGLE HUNG
SHWR	SHOWER
SIM	SIMILAR
SGL	SINGLE
SL	SLOPE
SC	SOLID CORE
SP	SOUND PROOF
STC	SOUND TRANSMISSION CLASS
S	SOUTH
SPKR	SPEAKER
SPEC(S)	SPECIFICATION (S)
SQ	SQUARE
S.F.	SQUARE FOOT/FEET
SQ.IN.	SQUARE INCH (S)
SQ.YD.	SQUARE YARD (S)
SSTL	STAINLESS STEEL
STAG	STAGGER (ED)
STD	STANDARD
STA	STATION
STL	STEEL
SI	SYSTEME INTERNACIONALE (METRIC SYSTEM)
STOR	STORAGE
SD	STORM DRAIN
STRUC	STRUCTURAL
SUBFLR	SUBFLOOR
SUSP	SUSPENDED
SYM	SYMMETRY (ICAL)
SYS	SYSTEM
S/S	SAND & SEAL
TEL	TELEPHONE
TV	TELEVISION
TEMP	TEMPERED/TEMPORARY
TERM	TERMINATE (ION)
TERR	TERRAZZO
THK	THICK (NESS)
THRES	THRESHOLD
TOL	TOLERANCE
T&G	TONGUE & GROOVE
T.O.B.	TOP OF BEAM
T.O.C.	TOP OF CURB
T.O.J.	TOP OF JOIST
T.O.M.	TOP OF MASONRY
T.O.SL.	TOP OF SLAB
T.O.S.	TOP OF STEEL
T.O.W.	TOP OF WALL
T.O.PAR.	TOP OF PARAPET
TC	TRASH COMPACTOR
T	TREAD
TYP	TYPICAL
UC	UNDERCOUNTER
UNFIN	UNFINISHED
UNO	UNLESS NOTED OTHERWISE
URIN	URINAL
VJ	V-JOINT
VAR	VARNISH
VNR	VENEER
VERT	VERTICAL
VEST	VESTIBULE
VB	VINYL BASE
VIF	VERIFY IN FIELD
VCT	VINYL COMPOSITION TILE
VT	VINYL TILE
VWC	VINYL WALLCOVERING
WSCT	WAINSCOT
WIC	WALK IN CLOSET
WF	WALL FABRIC
WC	WATER CLOSET
WH	WATER HEATER
WHD	WALL HYDRANT
WP	WATER PROOFING
WR	WATER RESISTANT
WS	WATER STOP
WT	WEIGHT
WWM	WELDED WIRE MESH
W	WEST/WASHER
WDW	WINDOW
WG	WIRE GLASS
WM	WIRE MESH
W/	WITH
W/O	WITHOUT
WD	WOOD
WI	WROUHGT IRON
YD	YARD

5-O-20-UR
Revised: 4/27/2020

FALCONNIER
DESIGN COMPANY
4622 Chambliss Avenue
Knoxville, TN 37919
Phone 865.584.7868
Fax 865.584.3139
faldesco@gmail.com

© copyright 2020

DAMON A. FALCONIER
REGISTERED ARCHITECT
AGRICULTURE
STATE OF TENNESSEE

CEDARBROOK
OFFICE
MODULAR
BUILDING

WEST PARK BAPTIST CHURCH
8835 MIDDLEBROOK PIKE
KNOXVILLE, TN 37923

COVERSHEET &
PROJECT DATA

AS INSTRUMENTS OF SERVICE, THESE DRAWINGS AND THE DESIGN REPRESENTED BY THEM ARE THE PROPERTY OF DAMON A. FALCONNIER AND AS SUCH ARE PROTECTED BY STATE AND FEDERAL COPYRIGHT LAWS. REPRODUCTION OR USE OF THESE DRAWINGS OTHER THAN FOR THE PROJECT INTENDED WITHOUT WRITTEN CONSENT FROM DAMON A. FALCONNIER IS PROHIBITED. UNAUTHORIZED USE WILL BE SUBJECT TO LEGAL ACTION.

DRAWN BY:	GHF
CHECKED BY:	DAF
ISSUED:	03/26/20
REVISION(S):	
1 04/01/20	2 ~
FILE:	2020-009

G-001

01 10 00 - General

1. Specifications:
   1.1. General Requirements, and Material and Product Specifications are contained on the Specification sheets (G-100 series) and in the Construction Drawings, details and notes bound into this set of Construction Documents. There is not a separately bound Project Manual.
   1.2. Conflicts between the contents of this specification and the contents of the Construction Drawings shall be governed by the latter unless noted otherwise.
2. Damage to existing site elements, buildings, equipment, finishes, etc. which results from demolition or construction activities shall be repaired and/or replaced at no additional cost to the Owner. See Division 2 where applicable.
2. On-Site meetings:
   2.1. Owner and Architect may, at their discretion, request weekly, bi-weekly, monthly or bi-monthly progress meetings on-site with general contractor.
   2.2. Meeting time and location shall be determined with Owner, Architect and General Contractor.
   2.3. If meeting is to be held on-site, GC shall provide location in temporary office or in suitable alternate location.

01 20 00 - Bidding, Contracts, Allowances, Alternates & Insurance

1. Bidding:
   1.1. It is the Owner's intent to negotiate this project with a pre-qualified general contractor.
2. Contracts:
   2.1. Selected General Contractor shall be asked to prepare and execute an AIA standard contract to be determined. General Conditions A-201 shall also apply where cited.
   2.2. Applications for payment shall be AIA document G702 (schedule of values) with G703 continuation forms.
   2.3. Change Orders shall be AIA document G701. Change Orders shall not be approved without completed G701, Architect cannot authorize work which shall result in a change order; such work can only be authorized by the Owner in writing. Owner reserves the right to request pricing before any change order work commences. GC, sub-contractors or vendors shall not be compensated for unauthorized change order work.
   2.4. All AIA contracts, amendments and attachments shall be completed in triplicate with originals for each of the GC, Owner and Architect.
3. Allowances:
   3.1. Provide an allowance of $5,000.00 for Special Inspections and Testing. Any portion of the allowance which is not needed for Special Inspections or Testing shall be considered as part of contract savings governed under the Contract for Construction. Additional funds for Special Inspections or Testing shall be obtained via Change Order. Un-used portions of any allowances shall be considered as part of contract savings governed under the Contract for Construction.
   3.2. Provide a 5% contingency for site work for the possible mitigation of unsuitable soil or rock in the excavations. Un-used portions of the contingency shall be considered as part of contract savings governed under the Contract for Construction.
   3.3. Provide a 5% construction contingency. Un-used portions of the contingency shall be considered as part of contract savings governed under the Contract for Construction.
4. Alternates:
   4.1. Add Alternates: Provide wood-framed stoop roof at entry door as shown on drawings.
5. Insurance:
   5.1. Owner shall provide Builder's Risk insurance.
   5.2. Fire: Building is outside municipal fire department response area. It is recommended that the GC verify that the owner has obtained subscription to private fire suppression response provider (i.e. Rural/Metro Fire Department). If not, GC & owner may want to explore adding this protection during the time of construction.

01 30 00 - Project Proceedures

1. Contract Documents and Specifications
   1.1. The GC shall be provided with sufficient paper copies of all documents to obtain all permits.
      1.1.1. PDF or other electronic format may be provide for electronic submission where applicable.
   1.2. Additional paper copies of documents may be requested by the GC at nominal cost for each set.
2. Building Permit:
   2.1. Certified Address document has been obtained by the Architect and is required for submittal for grading and building permits.
   2.2. All permit applications, fees, and submittals shall be the responsibility of the GC and include, but are not necessarily limited to, the following:
      2.2.1. Demolition Permit Submittal & Fees
      2.2.2. Grading Permit Submittal & Fees
      2.2.3. Building Permit Submittal & Fees
      2.2.4. Storm water Permit, Bonds & Fees.
      2.2.5. Inspections
      2.2.6. Certificate of Occupancy
   2.3. GC shall maintain a current, sealed, approved copy of all construction documents on site including, but not limited to: grading permit, building permit, approved plans and specifications, shop drawings and test data. These documents shall be kept on the job site at all times for viewing by inspectors, owner, architect or engineer.
   2.4. Additional Documentation
      2.4.1. The following additional documentation preparation required by Authority Having Jurisdiction shall all be an additional service if provided by Architect:
         2.4.1.1. Permit application
         2.4.1.2. Code Summaries
         2.4.1.3. Special Inspection Forms
         2.4.1.4. Other forms required by Authority Having Jurisdiction.
3. Work by others:
   3.1. Security System:
      3.1.1. Shall be provided by Owner.
      3.1.2. If security system is to be installed during construction, Owner shall coordinate security contractor's activities with General Contractor.
   3.2. IT/communications
      3.2.1. Shall be provided by owner
      3.2.2. If IT/communications equipment is to be installed during construction, Owner shall coordinate security contractor's activities with General Contractor.
4. Temporary facilities
   4.1. GC shall maintain a field office on site in a location agreed upon by the GC, Owner and architect. Site superintendent and project manager shall provide telephone numbers and email addresses to owner and architect.
   4.2. GC shall coordinate with the owner the locations of all on-site "lay down" and materials storage areas.
   4.3. GC is responsible for setting up temporary power and utilities, and coordinating use with the owner.

01 40 00 - Quality Assurance

1. Submittals shall include shop drawings, color selectors, material samples and other items necessary to communicate to the architect [and engineer] compliance with the Construction Documents and Specifications.
   1.1. Send shop drawings submittals via email to:
      [graham.fox@falconnier.net]
      [faldesco@gmail.com]
   1.2. Shop Drawings and/or samples shall be required for all materials, items, installations and equipment specified in this set of construction documents whether or not specifically requested in each section of this Specification or on the drawings.
   1.3. Submittals shall be in PDF or CAD format. Paper shop drawings will be acceptable if requested.
      1.3.1. Please schedule up to (7) business days for shop drawing review.
   1.4. Submittals of samples and color selection material: provide no less than (2) actual material samples. Color copies, electronic submittals of colors and samples shall not be acceptable.
      1.4.1. Ship material samples to:
         Falconnier Design Co.
         4622 Chambliss Avenue
         Knoxville, TN 37919
   1.5. Review of shop drawings does not relieve the general contractor or subcontractors from compliance with the construction documents or any applicable codes and standards.
   1.6. Shop drawings, specified materials, methods or products will not be reviewed or approved verbally or over telephone conversations. Reviews and approvals will be considered and answered in writing only (which may include letters, addenda, modified drawings, and emails).
2. Quality Control
   2.3. For all materials and installations (including in this outline specification and specifications in the drawings), specifications are intended to indicate that the GC, sub-contractors or vendors are to "provide and install" in a "neat and workman-like manner" a "complete installation" with all required accessories, additives, installation equipment, etc. All specifications, unless noted otherwise, are intended to indicate a finished construction, operation or application, in working order and meeting all codes and inspections, ready to be turned over to the Owner for its intended end-use. All specifications are to assume "best quality".
   2.4. Do not scale drawings. Work to all dimensions.
   2.5. Inform architect immediately of dimensional discrepancies, conflicts between drawings or between specifications and drawings. If field conditions are found to be different than what is shown in drawings, notify architect immediately.
   2.6. GC shall maintain records of all testing reports, organized in date order by material or section.
   2.7. General and Subcontractors shall warrant their work for a period of not less than 1 year (nor less than stipulated by law) from the Date of Final Acceptance. All materials and installations shall be installed so as to be in full compliance with all manufacturer's warranties.
3. General Materials Storage and Handling
   3.1. Specific instructions included with materials and equipment, including factory instructions and manufacturer's handling instructions, shall take precedence over conflicting instructions in this section.
   3.1. Materials shall be delivered to site in factory packaging or with factory markings. Neatly unload materials and equipment so as to not incur damage. Materials damaged during storage, handling or installation shall be replaced at no additional cost to the owner.
   3.2. Materials shall be stored in locations determined by owner and general contractor.
   3.3. Materials shall be carefully protected from weather, incidental construction damage or handling damage.
      3.3.1. Do not allow materials to sit in water or mud, provide setting blocks as required.
   3.4. Materials which are sensitive to moisture and/or temperature shall not be stored outside or under conditions which will damage them. Finish materials shall be fully acclimated to conditioned interior space prior to installation.
4. General Contractor shall test all installed equipment prior to Substantial Completion to verify functionality and compatibility of components for systems including, but not limited to:
   4.6. HVAC
   4.7. Emergency Lighting
   4.8. Plumbing
5. Field Direction and Alterations to Design: any changes to and deviations from the design and specifications found in the Contract Documents shall be issued in writing via letter, email, revised drawings or addenda. No changes or deviations will be approved or authorized via on-site or telephone conversation without written direction follow-up and clarifications.

01 70 00 - Project Close-Out

1. Project Close Out:
   1.1. Before date of Substantial Completion, General Contractor shall thoroughly clean entire [work area or other affected areas.
   1.2. Close-out Manual:
      1.2.1. At date of Substantial Completion, General Contractor shall present Owner with (2) complete Close-out Manuals containing all pertinent information about installed equipment, systems, materials, finishes, and shall include (but not be limited to) the following:
         1.2.1.1. Warranties
         1.2.1.2. Cut-sheets
         1.2.1.3. MSDS forms
         1.2.1.4. Test results
         1.2.1.5. Maintenance and operations manuals for all installed equipment
         1.2.1.6. Other information about installed equipment, finishes and materials.
         1.2.1.7. Inspection records, final inspection and certificate of occupancy or completion
      1.2.2. These copies shall be bound into three-ring binders and organized by sections and materials.
         1.2.2.1. PDF or other electronic means, similarly bookmarked and organized, may be employed in lieu of binders when approved in writing by the architect and owner.
   1.3. General Contractor shall schedule operation and maintenance training sessions for Owner for all installed equipment including, but not limited to:
      1.3.1. HVAC
      1.3.2. Plumbing
   1.4. HVAC, fire alarm and other system operations training shall be performed on site with a representative of the Owner present.
      1.4.1. General contractor may request written confirmation from the Owner that training has taken place, noting the date and personnel present.
   1.5. Provide Owner with original or certified copy of "Certificate of Occupancy".
2. As-Built Documents
   2.1. GC shall maintain an annotated set of Construction Documents which shall reflect any and all deviations from the Drawings and Specifications. These shall be surrendered to the Owner upon project completion.
      2.1.1. Architect and GC may electronically scan this document for their own records.
   2.2. Annotations shall include (but are not necessarily limited to):
      2.2.1. Site Utility locations & depths
      2.2.2. Adjusted and field dimensions
      2.2.3. Field modifications or corrections
      2.2.4. Owner-requested changes or corrections
      2.2.5. Capacity and sizes (i.e. electrical, mechanical or plumbing) which are different than designed

03 21 00 Concrete Reinforcing Steel

1. Reinforcing Steel shall be 60 ksi yield steel.
   1.1. Bars shall be lapped not less than the greater of 26" or 50x the bar diameter using a "Class B" tension splice.
2. Epoxies for dowelled or drilled steel reinforcing shall be 2-part high strength acrylic supplied in side-by-side or co-axial cartridge and dispensed through proprietary static mixing nozzle. Epoxies shall be equal to:
   2.1. Simpson Strong-Tie "AT-XP High Strength Acrylic-Tie".
   2.2. Hilti "HIT-HY 150 MAX-SD" system.
   2.3. Approved Equal.
3. Minimum concrete cover of 3" over reinforcing when concrete is placed against ground.
4. Unless noted otherwise, concrete protection shall be at least equal to the diameter of the bar or 1/3 of the slab thickness for mesh, or ACI 318-08 (or latest edition) whichever is most stringent.
5. See Structural for Sizes and locations of reinforcing steel. Structural engineer's requirements shall supercede any conflicting information in this Section.

03 22 00 Welded Wire Fabric

1. Welded wire fabric (WWF) shall be:
   1.1. ≤ 4" slabs: 6x6x1.4/1.4 WWF.
2. WWF shall conform to ASTM A184 (latest edition).
3. Lap WWF a minimum of 8" between sheets.
4. Support WWF during pacing of concrete to position fabric mid-depth of concrete.

03 30 00 Cast-in-Place Concrete

1. General:
   1.1. This section is for interior concrete slabs and concrete footings. See 32 20 00 for exterior concrete pavement, where applicable.
   1.2. Concrete work shall comply with ACI 301, current edition. Design shall conform to ACI 318, current edition, unless noted otherwise by structural engineer.
   1.3. All concrete shall be 3,000 psi (minimum) unless noted otherwise on drawings.
      1.1.1. Submit concrete mix design documentation for review prior to placement.
      1.1.2. Concrete shall be transit mixed to avoid stratification
      1.1.3. See Structural Drawings for additional concrete requirements. Structural engineer's requirements shall supercede any conflicting information in this Section.
2. Materials
   2.1. Cements shall conform to ASTM C150-150 (latest edition), type 1
   2.2. Water shall be clean and potable.
   2.3. Aggregates:
      2.3.1. Fine Aggregates:
         2.3.1.1. Manufactured Sand conforming to ASTM C-33 & C330 (latest editions)
         2.3.1.2. Natural Sand conforming to ASTM C33
         2.3.1.3. Recycled crushed concrete where permitted by structural engineer
         2.3.1.4. Fly Ash in quantities not to exceed ASTM C618. Fly Ash quantities shall not reduce 7- or 28-day strength test requirements per ASTM C109 testing standards.
      2.3.2. Course Aggregates: No. 57 clean, washed, stone conforming to ASTM C-30 (latest edition)
   2.4. Use of calcium chloride, chloride ions or other salts in concrete is not permitted.
   2.2. Air entrainment admixtures shall conform to ASTM C260 (latest edition). Air content 5% - 7% for exterior concrete. Follow all manufacturer's instructions.
   2.3. Water reduction admixtures shall conform to ASTM C494 (latest edition).
3. Testing
   3.1. Concrete shall be strength tested. Provide test cylinders for testing at 7 and 28 days. Testing shall be done by an engineer licensed in the state in which concrete is to be placed. Engineer shall submit test reports. Substandard concrete shall be replaced at no additional cost to the Owner.
   3.2. Concrete shall be moisture tested prior to installation of floor finishes as directed by floor finish manufacturer. Submit test reports prior to installing finishes.
4. Placement
   4.1. Forms shall be the responsibility of the general contractor unless noted or detailed otherwise.
   4.2. Concrete shall be reinforced per drawings and as directed by structural engineer. [Architect][Engineer] shall observe reinforcing prior to concrete placement.
      4.2.1. Concrete reinforcing shall have the minimum cover as shown on drawings.
   4.3. Architect shall be informed a minimum of 24 hours prior to each pour for the purposes of observation.
   4.4. Exterior slabs shall slope away from building walls and/or doors a minimum of 1/8:12 and a maximum of 1/4:12 unless noted otherwise on drawings.
   4.5. Do not place concrete when outside temperatures are below freezing without providing heat source. Do not use combustion heaters for the first 24 hours after placement without suitable ventilation of exhaust vapors which can damage concrete.
   4.6. Concrete shall cure a minimum of (7) days before being exposed to structural loads or loads imposed by construction equipment. Some concrete mixes may require additional time, refer to structural engineer's drawings and specifications.

03 62 00 Non-Shrink Grout

1. Non-shrink, non-metallic grout shall comply with Corps of Engineers Specification USACE CRD-C621.
2. Compressive strength of 5,000psi at 28 days. Determine strength using ASTM C109 method.
3. Grout to be consolidated to provide uniformity. Do not vibrate.

04 05 13 Mortar

1. Type M; 2900psi at 28 days
   1.1. For use below grade or in contact with the earth.
2. Type S; 2100psi at 28 days
   2.1. For use in exterior exposed structural masonry above grade subject to weather exposure or for interior structural walls.
   2.2. For use in parapet walls
3. Mix mortar in approved, power batch mixer which shall be clean, free from water, hardened mortar and all foreign substances.

04 05 16 Reinforced Masonry Grout (RMG)

1. Grout for masonry reinforcing shall comply with this section unless noted otherwise on details.
   1.1. Structural engineer's plans and specifications shall supercede any conflicting information in this Section.
2. Products shall be equal to "Spec Mix SCG" or "Spec Mix Core Fill Grout" as manufactured by Spec Mix, Inc. Eagan, MN; 888-773-2649; www.specmix.com
3. Reference Standards:
   3.1. Masonry Grout and Self-Consolidating Masonry Grout shall conform to ASTM C476, C1019, ACI 530.1, National Concrete Masonry Association (NCMA) recommendations and all applicable Building Codes and Standards.
   3.2. Submit mix design for review prior to installation.
4. Compressive strength shall be not less than 3,000psi.
   4.1. Minimum strength: 2000psi
   4.2. Maximum strength: 5000psi
   4.3. In general, grout strength shall be complementary to compressive strength values of other structural components including concrete block and cast-in-place concrete.
5. Aggregates:
   5.1. Shall comply with ASTM C404
   5.2. May be "fine" (<3/8") or "course" (<1/2") depending on project requirements and minimum required cover for steel reinforcing members.
   5.3. Fly Ash use in mix shall be governed by ASTM C595, C618, & C989.
6. Installation:
   6.1. Placement shall be in strict accordance with manufacturer's printed instructions, ACI/ASCE-530.1, ASTM standards, Building Codes and acceptable industry practices.
   6.2. Mixes are time sensitive, discard product if not installed within 30 minutes of mixing.
   6.3. Grout requires 28 days of curing time.

04 05 19 Masonry Accessories

1. All masonry anchors shall be hot-dipped galvanized.
2. Concrete Unit Masonry reinforcing shall be equal to "Dur-O-Wal" ladder type.
3. Brick Masonry cavity wall to metal stud wall shall be equal to Dur-O-Wal D/A 213 veneer anchors.
4. Corrugated Masonry ties shall not be accessible.
5. Compressible joint filler shall be as manufactured by WR Grace.

04 22 00 Concrete Unit Masonry

1. Concrete Unit Masonry shall be structural units of lightweight concrete conforming to ASTM C90.
   1.1. Structural requirements shall supercede any conflicting information in this Section.
2. Provide solid units where indicated on drawings.
3. Block with ferrous materials in the mix or aggregate are not acceptable and will be removed and replaced if rust staining occurs
4. Concrete Masonry Units shall be as manufactured by:
   4.1. Willocks Brothers
   4.2. Sequatchie Concrete
   4.3. Approved Equal
5. Where lintels bear on walls, fill all cells below lintel bearing.
6. Fill cells where indicated on architectural drawings.
7. Provide vertical and horizontal reinforcing where indicated on drawings.

06 10 00 Wood & Rough Carpentry

1. Pressure treated wood shall be ACQ, CBA-A or CA-B with less than 19% delivered moisture content.
   1.1. All wood in contact with concrete or exposed to weather (i.e. fascias and trims) shall be pressure treated (equal to Cox DuraPine Kiln Dried After Treatment)
2. Metal Connections for wood to wood connections shall be in locations and types shown on the drawings. Connectors shall be galvanized (ZMax). Connectors for maritime climates shall be stainless steel or protected with organic polymer coatings. For exterior and pressure treated wood connections, use ZMAX galvanized connectors, galvanized connectors with organic polymer barrier or stainless steel. For stainless steel connectors, stainless steel fasteners must be used. Connectors shall be equal to products manufactured by:
   2.1. Simpson Strong-Tie
   2.2. USP Structural Connectors
3. GC to provide solid 2x blocking as required to mount all fixtures, equipment and appurtenances shown on drawings including, but not limited to: plumbing fixtures, toilet accessories, millwork (including millwork by Owner), lighting, HVAC ducts, sprinkler piping, etc.
   3.1. Blocking shall be sufficiently anchored to structure to allow all mounted items to comply with code-required loads (i.e. grab bars, guardrails, and other such appurtenances) as required for each item.
4. All pressure treated wood shall have (1) layer of 15# felt paper installed between wood and all metal components to prevent metal corrosion. This shall apply to storefronts, flashing, copings, metal studs walls, etc. and where applicable.
   4.1. Pre-finished metal with organic-polymer protective barrier on the side facing facing the wood will be considered upon submittal of documentation demonstrating performance against corrosion and written warranty guarantee.

08 40 00 Aluminum Doors

1. General
   1.1. Provide complete installation as shown on drawings.
   1.2. Provide shop drawings showing each frame type and size including:
      1.2.1. windows
      1.2.2. doors
      1.2.3. head, jamb and sill details
      1.2.4. Glazing (where provided by aluminum manufacturer)
         1.2.4.1. Provide samples of glazing as requested.
   1.3. Provide thermally broken Aluminum storefront system:
   1.1. Approved Systems:
      1.1.1. Kawneer Trifab (451T)
      1.1.2. Oldcastle Series 3000 Thermal MultiPlane.
      1.1.3. Approved Equal
   1.2. Nominal 2" x 4 1/2" with center glazing.
   1.3. Color and finish shall be as indicated on drawings.
   1.4. See A-101 for Hardware notes.
2. Energy Code compliance (451T):
   2.1. System U: 0.45
   2.2. Entrance Doors: 36" wide: 54% glass U: 0.55
   2.3. SHGC: 0.45
   2.4. VT: 0.44
3. Glazing:
   3.1. All glazing in aluminum frames is to be low-e glazing in aluminum frames, dual pained with 1/2" air space with argon gas, equal to products manufactured by AGC, PPG or Versalux.
      3.1.1. Provide tempered glazing where indicated on drawings or as required by Code.
   3.2. Clear low-e glazing shall be equal to PPG "Solarshield" dual glazing
      3.2.1. UV: 51%
      3.2.2. Visible: 78%
      3.2.3. Solar Energy: 65%
      3.2.4. U: 0.46
      3.2.5. SHGC: 0.73
      3.2.6. Shading: 0.84
4. Aluminum Frame Installation
   4.1. Shop drawings shall be submitted and reviewed prior to fabrication and installation.
   4.2. Door and window openings shall be field measured prior to fabrication and installation. Sizes shown on drawings are nominal.
   4.3. Installation shall be in a neat, workmanlike and weather tight manner.

32 10 00 Asphalt Paving

1. Project includes patching of existing asphalt pavement and small sections of new pavement as required.
   1.1. See Civil Drawings for additional requirements. Civil engineer's requirements shall supercede any conflicting information in this Section.
   1.2. Asphalt paving along accessible routes shall comply with the 2010 ADA/2009 ANSI 117.1 accessibility standards and all local codes and standards
2. GC shall verify location of property lines and other restrictions.
3. Asphalt Materials:
   3.1. Aggregate Base shall be crushed stone, Class A, Grading D as specified in Subsection 903.05 of the current version of the Tennessee Department of Transportation Standard Specifiactions (TDOTSS).
   3.2. Binder course shall have asphalt cement conforming to AASHTO designation M226 for viscosity grade AC-20, and shall conform to Subsection 903.06 of the TDOTSS Grading B.
   3.3. Bituminous asphalt pavement should be Grading "E" as per Section 411 for the surface mix and Grading "BM" as per section 307 for the binder mix.
   3.4. Asphaltic Concrete Surface course shall meet the requirements of AASHTO Designation M-226 for viscosity AC-20 and TDOTSS subsection 903.06 Grading C-S.
   3.5. Tack coat shall be emulsified asphalt ASTM D 977.
4. Patching:
   4.1. Saw cut perimeter of patch and excavate existing pavement section to sound base. Re compact new sub grade. Extend cuts 12" into sound pavement. Cut excavation faces vertically.
   4.2. Tack coat faces of excavation and allow to cure before paving.
   4.3. Partially fill excavation with dense-graded, hot-mix asphaly base and mix and compact while still hot.
   4.4. Install and compact leveling course.
      4.4.1. Do not install in lifts greater than 3".
   4.5. Apply tack coat uniformly at 0.05 to 0.15 gal/sq.yd. Avoid smearing or staining adjacent surfaces.
5. Re-Mark pavement as required. See Site Plan. Paint shall be equal to Pratt & Lambert Alkyd Traffic Paint MWF 3.6 mils/coat.

FLEXIBLE PAVEMENT RECOMMENDATIONS		
PAVEMENT MATERIALS	LIGHT-DUTY	HEAVY-DUTY
BITUMINOUS ASPHALT SURFACE MIX	1.5"	1.5"
BITUMINOUS ASPHALT BASE MIX	2.0"	3.0"
COMPACTED CRUSHED AGGREGATE BASE	6.0"	8.0"

32 20 00 Exterior Concrete Paving

1. Project includes patching of existing concrete pavement and sections of new pavement and sidewalks as required.
   1.1. See Civil Drawings for additional requirements. Civil engineer's requirements shall supercede any conflicting information in this Section.
   1.2. Concrete paving along accessible routes shall comply with the 2010 ADA/2009 ANSI 117.1 accessibility standards and all local codes and standards
2. GC shall verify location of property lines and other restrictions.
3. Materials:
   3.1. Concrete for equipment pads:
      3.1.1. 6" thick (min) 4000psi reinforced with welded wire fabric or reinforcing bars to assist in controlling cracking from drying shrinkage and thermal changes. See 03 22 00.
   3.2. Concrete sidewalks:
      3.2.1. 4" thick (min) 4000psi reinforced with welded wire fabric or reinforcing bars to assist in controlling cracking from drying shrinkage and thermal changes. See 03 22 00.
   3.3. Concrete shall be placed over 4" (min) compacted crushed stone base over compacted substrate or fill. See Table below.
   3.4. Finish shall [be broom finish in direction perpendicular to traffic flow with smooth trowelled 6" at edges and at joints] [match existing].
   3.5. Sawed or formed control joints should be included for each 225 square feet of area or less (15 feet by 15 feet).
   3.6. Saw cuts should not cut through the welded wire fabric or reinforcing steel and dowels should be utilities at formed and/or cold joints.
   3.7. Provide all accessories necessary for a complete installation of sidewalks and pads as indicated in construction drawings.
   3.8. Sidewalks shall not slope more than 1:20 along the direction of travel. Sidewalks shall have a cross slope not more than 1:48.
4. Patching:
   4.1. Saw cut perimeter of patch and excavate existing pavement section to sound base. Re compact new sub grade. Extend cuts 12" into sound pavement. Cut excavation faces vertically.
5. Re-Mark pavement as required. See Site Plan. Paint shall be equal to Pratt & Lambert Alkyd Traffic Paint MWF 3.6 mils/coat.

RIGID PAVEMENT RECOMMENDATIONS		
PAVEMENT MATERIALS	LIGHT-DUTY	HEAVY-DUTY
4000psi TYPE I CONC.	4.0"	6.0"
COMPACTED CRUSHED AGGREGATE BASE	4.0"	6.0"

FALCONNIER
DESIGN COMPANY
4622 Chambliss Avenue
Knoxville, TN 37919
Phone 865.584.7868
Fax 865.584.3139
faldesco@gmail.com

© copyright 2020

DAMON A. FALCONNIER
REGISTERED ARCHITECT
AGRICULTURE
COMMERCE
NO. 02328
STATE OF TENNESSEE

CEDARBROOK
OFFICE
MODULAR
BUILDING

WEST PARK BAPTIST CHURCH
8835 MIDDLEBROOK PIKE
KNOXVILLE, TN 37923

SPECIFICATIONS

AS INSTRUMENTS OF SERVICE, THESE DRAWINGS AND THE DESIGN REPRESENTED BY THEM ARE THE PROPERTY OF DAMON A. FALCONNIER AND AS SUCH ARE PROTECTED BY STATE AND FEDERAL COPYRIGHT LAWS. REPRODUCTION OR USE OF THESE DRAWINGS OTHER THAN FOR THE PROJECT INTENDED WITHOUT WRITTEN CONSENT FROM DAMON A. FALCONNIER IS PROHIBITED. UNAUTHORIZED USE WILL BE SUBJECT TO LEGAL ACTION.

DRAWN BY:	GHF
CHECKED BY:	DAF
ISSUED:	03/26/20
REVISION(S):	
1 04/01/20	2 ~
FILE:	2020-009

G-100

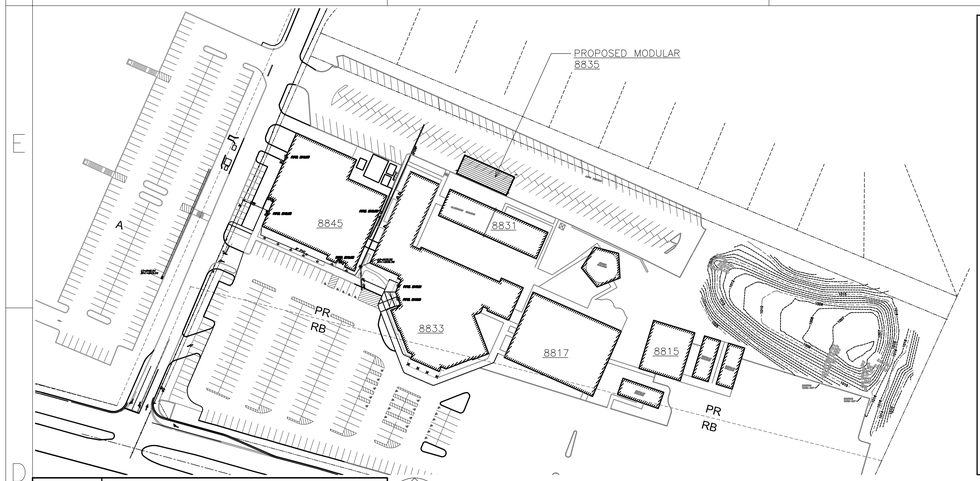

D1 SITE LOCATION PLAN
1" = 100'-0"

SITE INFORMATION:

MUNICIPAL JURISDICTION: KNOX COUNTY, TN

SITE ZONE: "PR" PLANNED RESIDENTIAL
REQUIRES SITE PLAN REVIEW BY KNOX PLANNING

PARCEL ID: 105 15701

DISTRICT: W6

AREA: 9.75 ACRE

SITE PLAN BASED ON ARCHITECT'S FIELD OBSERVATIONS, PUBLICLY AVAILABLE KGIS DATA AND SURVEYS PREPARED BY LAND DEVELOPMENT SOLUTIONS.

MODULAR WILL BE LOCATED DIRECTLY BEHIND 8831 MIDDLEBROOK PIKE.

MODULAR IS WITHIN 400 LINEAR FEET OF EXISTING FIRE HYRDRANT.

PARKING:

EXISTING SPACES:
882 INCLUDING 32 ACCESSIBLE.
NEW MODULAR WILL DISPLACE 31 EXISTING PARKING SPACES, NONE OF WHICH ARE ACCESSIBLE.

TOTAL SPACES AFTER MODULAR PLACEMENT:
851 SPACES, INCLUDING 32 ACCESSIBLE

REQUIRED SPACES BASED ON SEATING CAPACITY OF AUDITORIUM: 15,401 S.F. ÷ 30 = 513 REQUIRED SPACES
2% ACCESSIBLE: 11 ACCESSIBLE SPACES REQUIRED

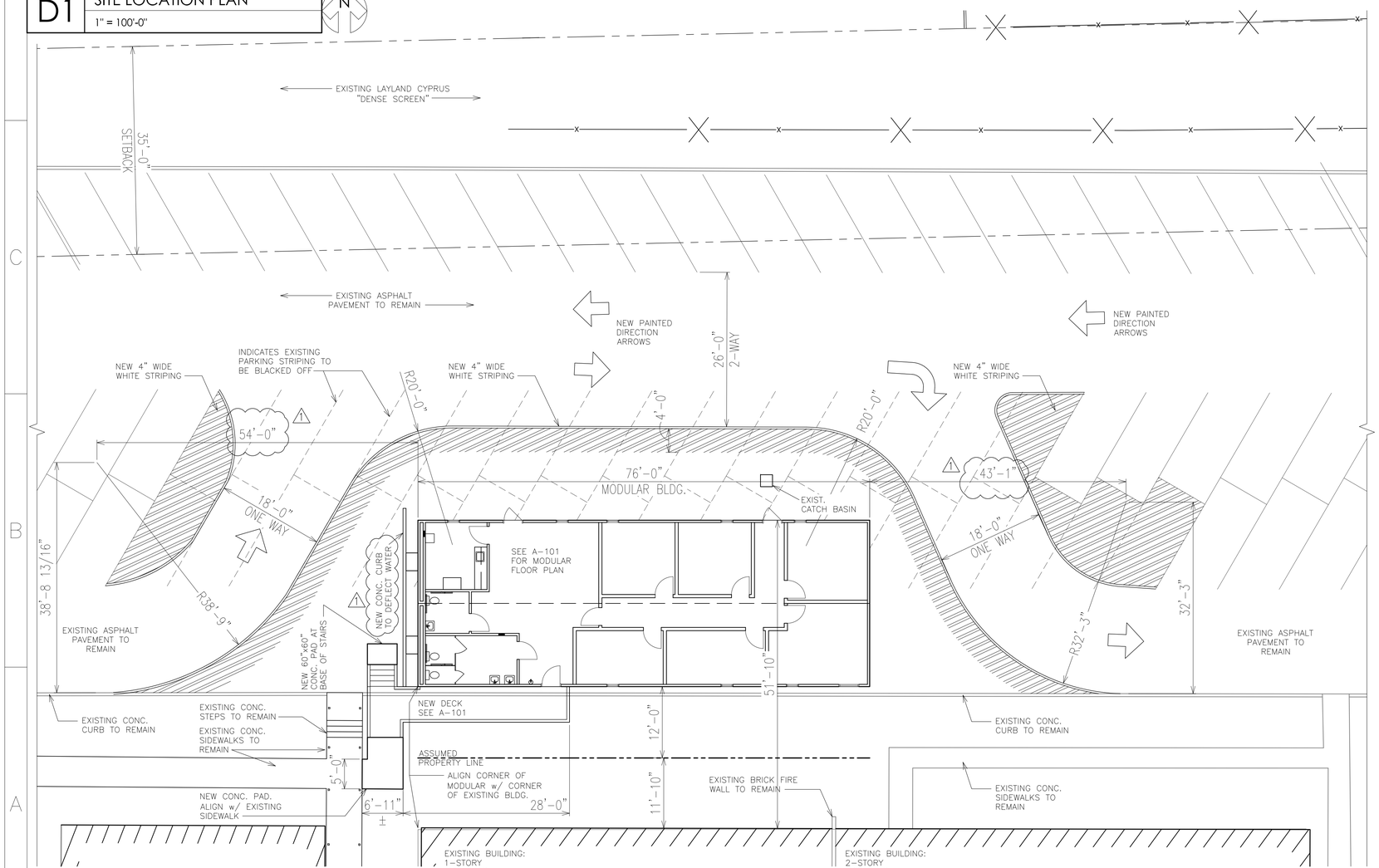

A1 SITE LAYOUT PLAN
1" = 10'-0"

5-O-20-UR
Revised: 4/27/2020

FALCONNIER
DESIGN COMPANY

4622 Chambliss Avenue
Knoxville, TN 37919
Phone 865.584.7868
Fax 865.584.3139
faldesco@gmail.com
© copyright 2020

DAMON A. FALCONNIER
REGISTERED ARCHITECT
AGRICULTURE
COMMERCE
No. 02245
STATE OF TENNESSEE

CEDARBROOK
OFFICE
MODULAR
BUILDING

WEST PARK BAPTIST CHURCH
8835 MIDDLEBROOK PIKE
KNOXVILLE, TN 37923

SITE LAYOUT
PLAN

AS INSTRUMENTS OF SERVICE, THESE DRAWINGS AND THE DESIGN REPRESENTED BY THEM ARE THE PROPERTY OF DAMON A. FALCONNIER AND AS SUCH ARE PROTECTED BY STATE AND FEDERAL COPYRIGHT LAWS. REPRODUCTION OR USE OF THESE DRAWINGS OTHER THAN FOR THE PROJECT INTENDED WITHOUT WRITTEN CONSENT FROM DAMON A. FALCONNIER IS PROHIBITED. UNAUTHORIZED USE WILL BE SUBJECT TO LEGAL ACTION.

DRAWN BY:	GHF
CHECKED BY:	DAF
ISSUED:	03/26/20
REVISION(S):	
1 04/01/20	2 ~
FILE:	2020-009

C-100

UTILITY PLAN NOTES:

GENERAL

1. WATER AND ELECTRICAL UTILITIES FOR THE MODULAR WILL BE SUPPLIED FROM THE EXISTING BUILDING SERVICES.
2. THERE IS AN EXISTING CRAWL SPACE ACCESS WHERE INDICATED ON PLAN.
3. INSULATE ALL NEW WATER LINES.
4. NOT USED
5. EXISTING STORM SEWER AND CATCHBASINS TO REMAIN

SEWER

S1. NEW 3" PVC SEWER LINE.
S2. CONNECT TO EXISTING MODULAR SEWER MAIN.
S3. TURN DOWN NEW SEWER INTO EXISTING CLEAN OUT. MODIFY CLEAN OUT CONNECTION AS REQUIRED. PROVIDE NEW CLEAN OUT AT MAIN LINE.
S4. EXISTING SANITARY SEWER LINE BELOW GROUND. VERIFY SIZE, DEPTH, INVERT AND FLOW DIRECTION PRIOR TO SETTING MODULAR OR CONNECTING NEW LINES.
S5. CLEAN OUT

WATER

W1. EXISTING 1" WATER LINE IN EXISTING BUILDING CRAWL SPACE.
W2. CONNECT NEW 3/4" TYPE "L" COPPER WATER LINE IN CRAWL SPACE WITH NEW SHUT-OFF VALVE DOWN STREAM OF EXISTING PRESSURE REDUCING VALVE. TURN DOWN BELOW GRADE TO MODULAR BUILDING.
W3. BRING NEW WATER LINE UP BELOW MODULAR AND CONNECT TO EXISTING MODULAR WATER DISTRIBUTION SYSTEM.
W4. RE-CONNECT EXISTING MODULAR ELECTRIC WATER HEATER.
W5. EXISTING PRV
W6. NEW BACKFLOW PREVENTER. SEE DETAIL THIS SHEET.

ELECTRICAL

E1. PROVIDE 2" CONDUIT AND PULL STRING FROM EXISTING BUILDING CRAWL SPACE BELOW GROUND TO MODULAR CRAWL SPACE FOR OWNER'S COMMUNICATIONS. PROVIDE PVC LONG-SWEEP 90° ELBOWS AT BELOW GROUND TO ABOVE GROUND TRANSITION.
E2. MODULAR BUILDING PANEL CONTAINING 150/2 MAIN BREAKER. PROVIDE 1 1/2" 3#1/0, 1#6G FEEDER FROM NEW PANEL "MP".
E3. EXISTING LCUB PAD-MOUNTED TRANSFORMER 120/208 VOLTS, 3-PH, 4-WIRE SECONDARY. ARRANGE w/ LCUB TO DELIVER A NEW 250 AMP 120/208 VOLT 3-PH 4-WIRE SERVICE FROM THIS TRANSFORMER TO NEW PANEL "MP". MODIFY CONCRETE PAD AS REQUIRED BY LCUB TO INSTALL NEW UNDERGROUND SERVICE WIRING. ARRANGE WITH LCUB TO METER THIS SERVICE AT THE PAD-MOUNTED TRANSFORMER ALONG WITH OTHER EXISTING SERVICE(S) DELIVERED FROM THIS TRANSFORMER.
E4. METER TO BE INSTALLED ON TRANSFORMER. COORDINATE WITH LCUB.
E5. PROVIDE 2 1/2" 4#250MCM CU FROM PAD MOUNTED TRANSFORMER TO NEW PANEL "MP". LOCATE LINE MINIMUM 24" BELOW FINISHED GRADE.
E6. FURNISH AND INSTALL NEW PANEL "MP" IN NEMA 3R ENCLOSURE. SEE PANEL BOARD SCHEDULE FOR REQUIREMENTS. PROVIDE SERVICE GROUNDING PER NEC REQUIREMENTS CONSISTING OF (2) DRIVED 3/4" x 10'-0" COPPERWELD GROUND RODS BONDED TOGETHER WITH A #2 AWG CONDUCTOR BY "CADWELD" PROCESS AND EXTEND TO PANEL "MP". BOND GROUND BUS TO SYSTEM NEUTRAL AT "MP". GROUND MAIN METALLIC COLD WATER PIPE TO ELECTRICAL SERVICE AT POINT WHERE METALLIC COLD WATER PIPE ENTERS BUILDING. GROUND MAIN TELECOMMUNICATIONS SERVICE EQUIPMENT IN MODULAR BUILDING TO ELECTRICAL SERVICE GROUND PER NEC REQUIREMENTS.

PANEL SCHEDULES

PANEL MP — MAINS: 250A — FEEDER SIZE: #250 MCM CU — VOLTAGE/PHASE: 120/208/3 — SHORT CKT. CAPACITY: 22,000 — MOUNTING: SURFACE — MAIN BREAKER: YES (250/3) — ENTRY: BOTTOM

CKT No.	SERVICES	LOAD (KVA) ØA	ØB	ØC	BREAKER TRIP	POLE	BREAKER POLE	TRIP	LOAD (KVA) ØA	ØB	ØC	SERVICES	CKT No.
1	MODULAR PANEL	12.0	~	~	150	2	1	20				SPACE ONLY	2
3		~	12.0	~									4
5	MODULAR PANEL		~	12.0	150	2							6
7		12.0	~	~									8
9	SPARE	~	~	~	150	2							10
11		~	~	~									12
13	SPACE ONLY	~	~	~	20	1							14
15		~	~	~									16
17		~	~	~									18
SUB-TOTAL CONNECTED		24.0	12.0	12.0					~	~	~	SUB-TOTAL CONNECTED	

SUB-TOTAL CONNECTED ØA: **24.0** SUB-TOTAL CONNECTED ØB: **12.0** SUB-TOTAL CONNECTED ØC: **12.0**

TOTAL CONNECTED: 48.0

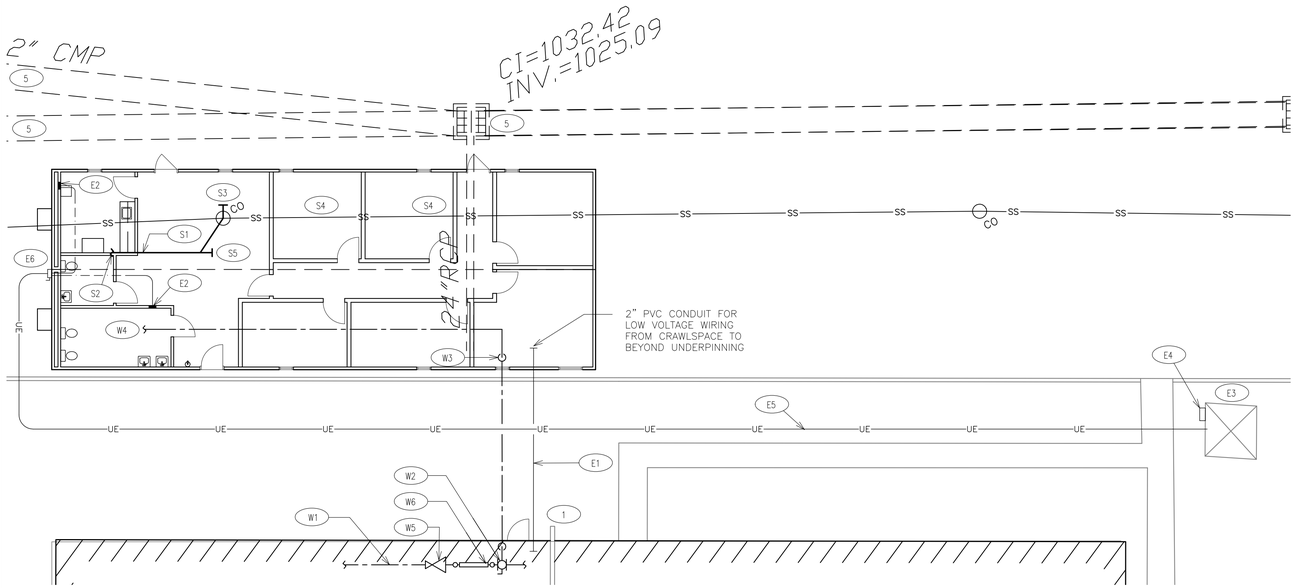

A1 SITE UTILITIES
1" = 10'-0"

NOTE: THIS PLAN IS DIAGRAMMATIC IN NATURE INTENDED TO SHOW CAPACITIES AND CONNECTIONS. DO NOT SCALE.

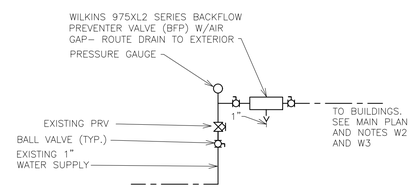

A5 BACKFLOW
NO SCALE

FALCONNIER DESIGN COMPANY
4622 Chambliss Avenue
Knoxville, TN 37919
Phone 865.584.7868
Fax 865.584.3139
faldesco@gmail.com

© copyright 2020

DAMON A. FALCONNIER — REGISTERED ARCHITECT — AGRICULTURE COMMERCE — NO. 02245 — STATE OF TENNESSEE

CEDARBROOK OFFICE MODULAR BUILDING

WEST PARK BAPTIST CHURCH
8835 MIDDLEBROOK PIKE
KNOXVILLE, TN 37923

SITE UTILITY PLAN

AS INSTRUMENTS OF SERVICE, THESE DRAWINGS AND THE DESIGN REPRESENTED BY THEM ARE THE PROPERTY OF DAMON A. FALCONNIER AND AS SUCH ARE PROTECTED BY STATE AND FEDERAL COPYRIGHT LAWS. REPRODUCTION OR USE OF THESE DRAWINGS OTHER THAN FOR THE PROJECT INTENDED WITHOUT WRITTEN CONSENT FROM DAMON A. FALCONNIER IS PROHIBITED. UNAUTHORIZED USE WILL BE SUBJECT TO LEGAL ACTION.

DRAWN BY:	GHF
CHECKED BY:	DAF
ISSUED:	03/26/20
REVISION(S):	
1 04/01/20	2 ~
FILE:	2020-009

C-101

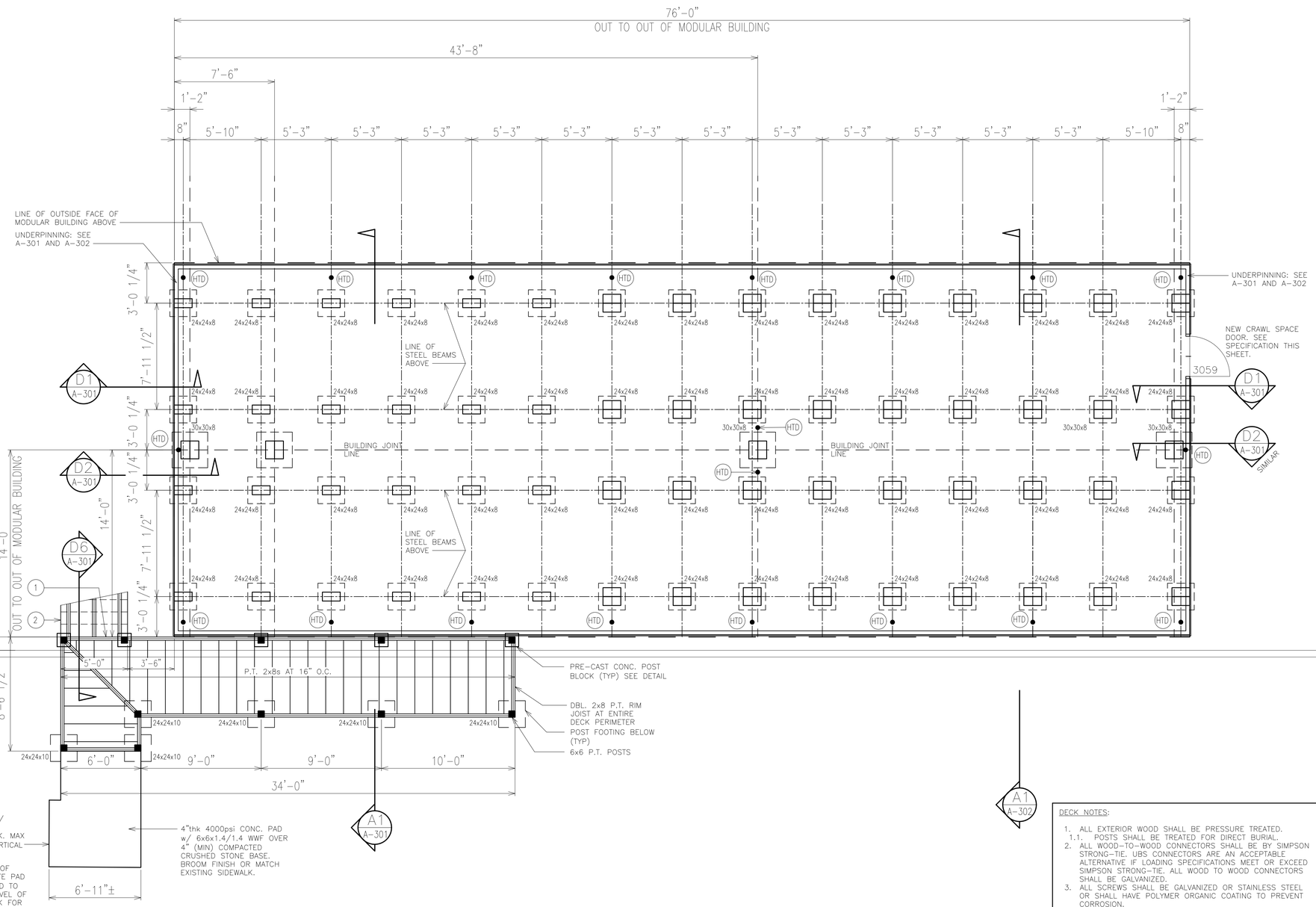

A1 FOUNDATION & DECK FRAMING PLAN
1/4" = 1'-0"

GRAPHIC LEGEND

A4 / A-101 — INDICATES DETAIL REFERENCE. TOP NUMBER IS DETAIL NUMBER. LOWER NUMBER IS SHEET ON WHICH DETAIL MAY BE FOUND.

A1 / A-303 — INDICATES SECTION/ELEVATION REFERENCE. TOP NUMBER IS DETAIL NUMBER. LOWER NUMBER IS SHEET ON WHICH DETAIL MAY BE FOUND.

24x24x10 — INDICATES COLUMN OR PIER FOOTING, NUMBERS INDICATED SIZE AND DEPTH– SEE DETAILS

INDICATES 8"x16" DRY-STACK CMU PIER w/ 24x24x8(MIN) CONC. FOOTING. UP TO 4'-0" (6 COURSES)

INDICATES 16"x16" DRY-STACK CMU PIER w/ 24x24x8(MIN) CONC. FOOTING. ≤4'-8" HIGH (7+ COURSES)

INDICATES 16"x16" DRY-STACK CMU PIER w/ 30x30x8(MIN) CONC. FOOTING.

INDICATES PRE-CAST CONC. DECK POST BASE. SEE A-301 AND A-302.

HTD — INDICATES TIE-DOWN AND HELICAL ANCHOR. SEE A-301 AND A-302.

NEW CRAWLSPACE DOOR:

1. PROVIDE GALVANIZED HOLLOW METAL INSULATED CORE DOOR IN GALVANIZED HOLLOW METAL FRAME PREPPED FOR HARDWARE. PROVIDE SILENCERS AT FRAME. DOOR AND FRAME SHALL BE PRIMED FOR PAINT. SEE SPECIFICATION ON SHT. G-100
1.1. CUSTOM SIZE SHOWN ON PLAN IS IN FEET AND INCHES. "3059" = 3'-0" x 5'-9"
2. PROVIDE (3) NRP HINGES EQ. TO HAGAR BB1199 US32 FINISH.
3. PROVIDE LEVER LOCKSET EQUAL TO YALE PB4705LN US32 FINISH.
3.1. OWNER TO SPECIFY KEY SCHEDULE.
4. PROVIDE SUITABLE THRESHOLD AND WEATHER STRIP KIT.
5. PROVIDE OVERHEAD MOUNTED 90-DEGREE DOOR HOLD-OPEN DEVICE, EQ. TO IVES 550S-H
6. PROVIDE DRIP CAP EQ. TO NGP 16MA
7. PROVIDE DOOR SHOE; NGP 95WH
8. PROVIDE DOOR SWEEP: NGP 200SA

STAIR NOTES:

1. DBL P.T. 2x10s AT STAIR HEAD FOR CARRIAGES (BELOW)
2. (3) DBL. 2x12 P.T. CARRIAGES AT STAIR

DECK NOTES:

1. ALL EXTERIOR WOOD SHALL BE PRESSURE TREATED.
1.1. POSTS SHALL BE TREATED FOR DIRECT BURIAL.
2. ALL WOOD-TO-WOOD CONNECTORS SHALL BE BY SIMPSON STRONG-TIE. UBS CONNECTORS ARE AN ACCEPTABLE ALTERNATIVE IF LOADING SPECIFICATIONS MEET OR EXCEED SIMPSON STRONG-TIE. ALL WOOD TO WOOD CONNECTORS SHALL BE GALVANIZED.
3. ALL SCREWS SHALL BE GALVANIZED OR STAINLESS STEEL OR SHALL HAVE POLYMER ORGANIC COATING TO PREVENT CORROSION.
4. THROUGH BOLTS SHALL BE STAINLESS STEEL WITH STAINLESS STEEL NUTS AND WASHERS.
5. PROVIDE SOLID BLOCKING WHERE REQUIRED FOR NOTCHING AND NAILING.
6. DO NOT CONNECT DECK TO MODULAR BUILDING. DECK SHALL BE FREE-STANDING.
7. DECKING SHALL BE PRESSURE TREATED 2x6's w/ EASED EDGES. FASTEN TO JOISTS w/ GALV. SCREWS. DO NOT NAIL. ADD BLOCKING AS REQUIRED BETWEEN JOISTS TO ACCOMMODATE DIAGONAL.
8. SEAL OR STAIN DECK AS DIRECTED BY OWNER.

STRUCTURAL GENERAL NOTES:

1. STRUCTURE HAS BEEN DESIGNED IN ACCORDANCE WITH THE 2018 INTERNATIONAL BUILDING CODE. DESIGN, MATERIALS AND WORKMANSHIP SHALL CONFORM TO THE REFERENCED CODES AND STANDARDS.
2. CONCRETE CONSTRUCTION SHALL COMPLY WITH ACI 318 AND ALL ADOPTED CODES AND STANDARDS.
3. MASONRY CONSTRUCTION SHALL COMPLY WITH ACI 530 "BUILDING CODE REQUIREMENTS FOR CONCRETE MASONRY STRUCTURES"
4. VERIFY ALL DIMENSIONS AND ELEVATIONS PRIOR TO STARTING CONSTRUCTION. WHILE EVERY EFFORT HAS BEEN MADE TO COORDINATE STRUCTURAL AND ARCHITECTURAL DRAWINGS, INFORM ARCHITECT AND ENGINEER OF DISCREPANCIES IMMEDIATELY UPON DISCOVERY.
5. STRUCTURE IS DESIGNED FOR A COMPLETED CONDITION ONLY AND THEREFORE WILL REQUIRE TEMPORARY SUPPORT AND BRACING DURING CONSTRUCTION (ESPECIALLY WOOD TRUSSES). THE SAFETY OF THE STRUCTURE DURING CONSTRUCTION INCLUDING ERECTION BRACING, SHORING, TEMPORARY SUPPORTS IS THE SOLE RESPONSIBILITY OF THE GENERAL CONTRACTOR.
6. VERIFY THE SIZE AND LOCATION OF ALL PLUMBING, MECHANICAL AND ELECTRICAL OPENINGS PRIOR TO ERECTING MASONRY AND LINTELS.
7. REVIEW ALL DRAWINGS FOR ADDITIONAL DIMENSIONS. REVIEW THE DRAWINGS AND SPECIFICATIONS OF OTHER TRADES FOR EMBEDDED OR RECESSED ITEMS NOT NECESSARILY SHOWN ON STRUCTURAL DRAWINGS.
8. FOOTING DESIGN ASSUMES A SOIL BEARING CAPACITY OF 2000psf.

FALCONNIER
DESIGN COMPANY
4622 Chambliss Avenue
Knoxville, TN 37919
Phone 865.584.7868
Fax 865.584.3139
faldesco@gmail.com

© copyright 2020

DAMON A. FALCONNIER
REGISTERED ARCHITECT
AGRICULTURE
STATE OF TENNESSEE

CEDARBROOK OFFICE MODULAR BUILDING

WEST PARK BAPTIST CHURCH
8835 MIDDLEBROOK PIKE
KNOXVILLE, TN 37923

FOUNDATION & DECK FRAMING PLAN

AS INSTRUMENTS OF SERVICE, THESE DRAWINGS AND THE DESIGN REPRESENTED BY THEM ARE THE PROPERTY OF DAMON A. FALCONNIER AND AS SUCH ARE PROTECTED BY STATE AND FEDERAL COPYRIGHT LAWS. REPRODUCTION OR USE OF THESE DRAWINGS OTHER THAN FOR THE PROJECT INTENDED WITHOUT WRITTEN CONSENT FROM DAMON A. FALCONNIER IS PROHIBITED. UNAUTHORIZED USE WILL BE SUBJECT TO LEGAL ACTION.

DRAWN BY:	GHF
CHECKED BY:	DAF
ISSUED:	03/26/20
REVISION(S):	
1 04/01/20	2 ~
FILE:	2020-009

A-100

MODULAR GENERAL NOTES:

1. MODULAR BUILDING IS EXISTING, CONSISTING OF (2) 14'-0" WIDE x 76'-0" LONG MODULAR UNITS DESIGNED TO BE PAIRED AS A SINGLE DOUBLE-WIDE UNIT. SEE BUILDING CODE NOTES.
2. DO NOT SCALE ANY DRAWINGS FROM ANY DISCIPLINE IN THIS SET OF CONSTRUCTION DOCUMENTS. WORK TO ALL DIMENSIONS. IF A DISCREPANCY IS FOUND, CONTACT ARCHITECT FOR CLARIFICATION.
3. NOTIFY ARCHITECT IF ANY DISCREPANCIES ARE FOUND BETWEEN THE CONTENTS OF THE SPECIFICATIONS, OR THE STRUCTURAL ARCHITECTURAL, MECHANICAL, PLUMBING AND ELECTRICAL DRAWINGS.
4. EXTERIOR DIMENSIONS ARE FROM OUTSIDE FACE TO OUTSIDE FACE OF EXISTING MODULAR EXTERIOR CLADDIMG.
5. INTERIOR DIMENSIONS ARE FROM FACE OF EXISTING FINISHES UNLESS NOTED OTHERWISE.
6. OWNER INTENDS TO RETAIN EXISTING PLUMBING FIXTURES, LIGHT FIXTURES, HVAC AND ELECTRICAL. MODULAR WILL BE CONNECTED TO EXISTING UTILITIES. SEE SITE UTILITY PLAN.
7. NEW INTERIOR FINISHES SHALL COMPLY WITH CHAPTERS 8 AND 12 OF THE INTERNATIONAL BUILDING CODE.
8. EXISTING TOILET ROOMS HAVE FRP WALL CLADDING AT WET LOCATIONS COMPLYING WITH IBC 8 AND 12.
9. ALL INTERIOR FINISH REPAIR AND REPLACEMENT, INCLUDING FLOORING, PAINTING, CEILINGS, BASE, ETC. IS TO BE DETERMINED BY THE OWNER.
10. DOOR SIZES NOTED ON PLAN ARE IN FEET AND INCHES. ALL DOORS AND WINDOWS ARE EXISTING TO REMAIN UNLESS NOTED OTHERWISE.

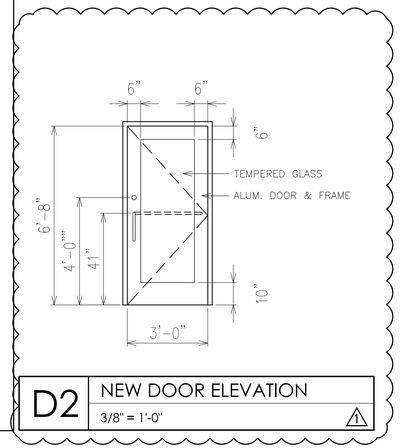

D2 NEW DOOR ELEVATION
3/8" = 1'-0"

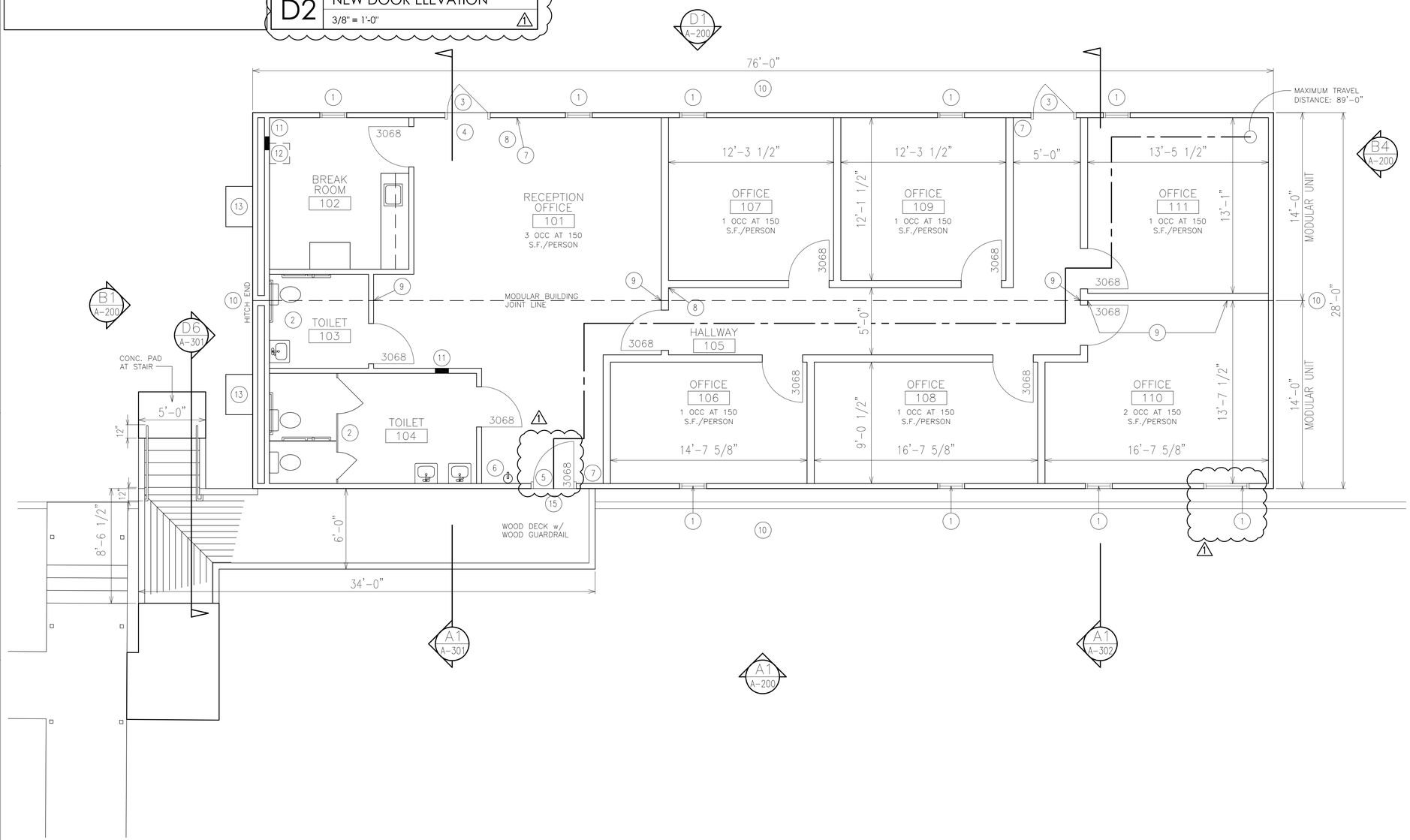

A1 FLOOR PLAN
1/4" = 1'-0"

PLAN NOTES:

1. EXISTING WINDOWS TO REMAIN. CLEAN INSIDE AND OUT.
2. EXISTING ACCESSIBLE TOILET ROOM TO REMAIN. RECONNECT ALL WATER AND SEWER LINES AND TEST ALL FIXTURES FOR FULL FUNCTIONALITY.
3. EXISTING DOOR IS NOT A REQUIRED MEANS OF EGRESS. REMOVE ALL INTERIOR HARDWARE AND SEAL CLOSED. REMOVE ANY SIGNAGE INDICATING AN EXIT. REPAINT INTERIOR OF DOOR AND PROMINENTLY STENCIL "NO EXIT" IN 3" HIGH CONTRASTING LETTERING OR PROVIDE INTERIOR FUR-OUT WITH FINISH TO MATCH EXISTING INTERIOR TO CONCEAL DOOR.
4. REMOVE EXISTING ILLUMINATED EXIT SIGN AND SAVE FOR RE-USE WHERE INDICATED. TEST OPERABILITY AND RESTORE TO WORKING ORDER IF REQUIRED.
5. REMOVE EXISTING DOOR AND FRAME. REPLACE WITH A NEW ALUMINUM DOOR AND FRAME AS FOLLOWS:
   - 5.1. MATCH FRAME SIZE TO ROUGH OPENING.
   - 5.2. SEE D2/A-101 FOR DETAIL
   - 5.3. CLEAR ANODIZED FINISH
   - 5.4. HARDWARE:
     - 5.4.1. PUSH/PULL BY ALUM. MANUF.
     - 5.4.2. YALE CYLINDER w/ INTERIOR THUMBTURN
     - 5.4.3. YALE 3501 CLOSER (MOUNTED INSIDE)
     - 5.4.4. NGP ADA COMPLIANT THRESHOLD
     - 5.4.5. WEATHER STRIPPING SUPPLIED BY ALUM. MANUF.
     - 5.4.6. DRIP CAP PROVIDED BY ALUM. MANUF.
6. INSPECT, REFURBISH OR RECHARGE, THEN RE-INSTALL EXISTING WALL MOUNTED FIRE EXTINGUISHERS. 48" A.F.F. TO CONTROLS.
7. REMOVE EXISTING HORN-STROBE, MANUAL PULL STATION OR OTHER FIRE ALARM DEVICE.
8. EXISTING COMBINATION ILLUMINATED EXIT SIGN AND BATTERY BACK-UP EMERGENCY LIGHTING UNIT TO REMAIN. TEST FOR OPERABILITY AND REPAIR AS REQUIRED TO FULL FUNCTIONALITY. SEE NOTE 16 BELOW.
9. WHEN RE-CONNECTING SIDES OF BUILDING AFTER RELOCATION AND SETTING, REPAIR INTERIOR FINISHES AT JOINTS TO LIKE-NEW CONDITION INDISTINGUISHABLE FROM SURROUNDING UNDISTURBED FINISHES.
10. CLEAN ENTIRE EXTERIOR OF BUILDING. SCRUB OFF ANY MOSS OR MOLD AND REPAIR ANY HOLES OR PENETRATIONS TO LIKE-NEW CONDITION INDISTINGUISHABLE FROM SURROUNDING UNDISTURBED AREAS. REPAINT AS DIRECTED BY OWNER.
11. EXISTING ELEC. PANEL. TEST ALL CIRCUITS. REPLACE NONFUNCTIONING OR WORN BREAKERS.
12. EXISTING EQUIPMENT RACK ABOVE...
13. EXISTING HVAC UNIT. EXAMINE, TEST, AND REPAIR AS REQUIRED TO FULL FUNCTIONALITY.
14. NOT USED
15. PROVIDE NEW LED DUAL-PURPOSE WALL PACK ON EXTERIOR WITH INTEGRAL PHOTOCELL, SEE A-200 FOR LOCATIONS. PROVIDE BATTERY BACK-UP FOR EMERGENCY EGRESS LIGHTING. (EQ. TO MAKO-LED-ACEM-NK). SEE NOTE 16 BELOW.
   - 15.1. PROVIDE UN-SWITCHED "HOT" CONDUCTOR FOR CIRCUITS SERVING EMERGENCY LIGHTS TO ALLOW NORMAL SWITCHING VIA PHOTOCELL/TIMER OF THESE CIRCUITS WITHOUT DISCHARGING BATTERIES IN EXIT SIGNS & EMERGENCY LIGHTS

5-O-20-UR
Revised: 4/27/2020

BUILDING CODE NOTES:

1. MUNICIPAL JURISDICTION: KNOX COUNTY, TN
   - 1.1. CODE ADMINISTRATION (BUILDING AND ZONING)
   - 1.2. FIRE PREVENTION BUREAU (FIRE AND SAFETY CODES)
2. CODES:
   - 2.1. 2018 INTERNATIONAL BUILDING CODE INCLUDING ALL LOCAL AMENDMENTS
   - 2.2. 2018 NFPA 101 LIFE SAFETY CODE
   - 2.3. KNOX COUNTY ZONING ORDINANCE
     - 2.3.1. "PR" ZONE
3. OCCUPANCY GROUP: "B" BUSINESS, CHURCH OFFICES
4. CONSTRUCTION TYPE: V-B, UN-SPRINKLERED, MODULAR BUILDING
5. GROSS AREA: 2,128 S.F.
6. OCCUPANT LOAD: 21 PEOPLE AT 150 GROSS S.F./PERSON
7. MEANS OF EGRESS:
   - 7.1. BUILDING COMPLIES WITH REQUIREMENTS FOR SINGLE EGRESS; <30 OCCUPANTS, <100' TRAVEL DISTANCE
   - 7.2. DOOR IS NOT REQUIRED TO SWING IN THE DIRECTION OF TRAVEL WHERE OCCUPANT LOAD <50.
8. EXISTING MODULAR BUILDING:
   - 8.1. MODULAR BUILDING ACQUIRED FROM FELLOWSHIP CHURCH. CURRENT USE IS OFFICES. THERE IS NO CHANGE OF OCCUPANCY. THERE IS NO PLANNED RECONFIGURATION OF INTERIOR SPACE.
   - 8.2. MODULAR BUILDING LABEL IS LOCATED IN DOOR OF ELECTRICAL PANEL AND IS AVAILABLE FOR INSPECTION ON SITE.
   - 8.3. TENNESSEE #s: TN0010313; TN0010316
   - 8.4. BUILT BY CUSTOM MODULAR SOLUTIONS, BARLEY, GA
   - 8.5. MODEL #CMS140TN
   - 8.6. CODES REFERENCED: 1997 STANDARD BLG. CODE, 1997 NFPA 101, 1997 STANDARD PLUMBING CODE, 1997 STANDARD MECHANICAL CODE, 1996 NATIONAL ELECTRIC CODE
   - 8.7. DESIGN FLOOR LIVE LOAD: 40 PSF
   - 8.8. DESIGN ROOF LIVE LOAD: 20 PSF
   - 8.9. DESIGN WIND LOAD: 80 PSF
   - 8.10. SEISMIC ZONE "C" (1997 SBC)
   - 8.11. ELECTRIC: 100a 120/240 1ø 60 Hz
     - 8.11.1. EXISTING MAIN BREAKER IS 150a
     - 8.11.2. THERE ARE 2 EXISTING PANELS
   - 8.12. EXISTING INSULATION:
     - 8.12.1. FLOOR U: 0.09
     - 8.12.2. WALLS U: 0.09
     - 8.12.3. ROOF U: 0.05
   - 8.13. EXISTING MODULAR HAS A NON-FUNCTIONING FIRE ALARM WHICH WILL BE COMPLETELY REMOVED.

FALCONNIER DESIGN COMPANY
4622 Chambliss Avenue
Knoxville, TN 37919
Phone 865.584.7868
Fax 865.584.3139
faldesco@gmail.com

© copyright 2020

DAMON A. FALCONNIER REGISTERED ARCHITECT AGRICULTURE ARCHITECT OWNER NO. 02285 STATE OF TENNESSEE

CEDARBROOK OFFICE MODULAR BUILDING

WEST PARK BAPTIST CHURCH
8835 MIDDLEBROOK PIKE
KNOXVILLE, TN 37923

FLOOR PLAN & LIFE SAFETY

AS INSTRUMENTS OF SERVICE, THESE DRAWINGS AND THE DESIGN REPRESENTED BY THEM ARE THE PROPERTY OF DAMON A. FALCONNIER AND AS SUCH ARE PROTECTED BY STATE AND FEDERAL COPYRIGHT LAWS. REPRODUCTION OR USE OF THESE DRAWINGS OTHER THAN FOR THE PROJECT INTENDED WITHOUT WRITTEN CONSENT FROM DAMON A. FALCONNIER IS PROHIBITED. UNAUTHORIZED USE WILL BE SUBJECT TO LEGAL ACTION.

DRAWN BY:	GHF
CHECKED BY:	DAF
ISSUED:	03/26/20
REVISION(S):	
1 04/01/20	2 ~
FILE:	2020-009

A-101

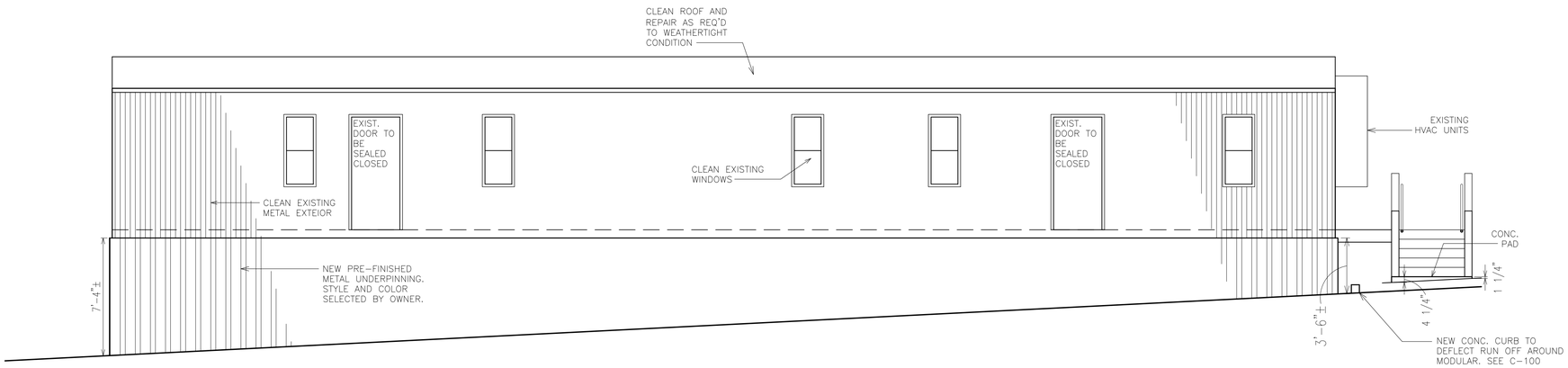

D1 NORTH ELEVATION
1/4" = 1'-0"

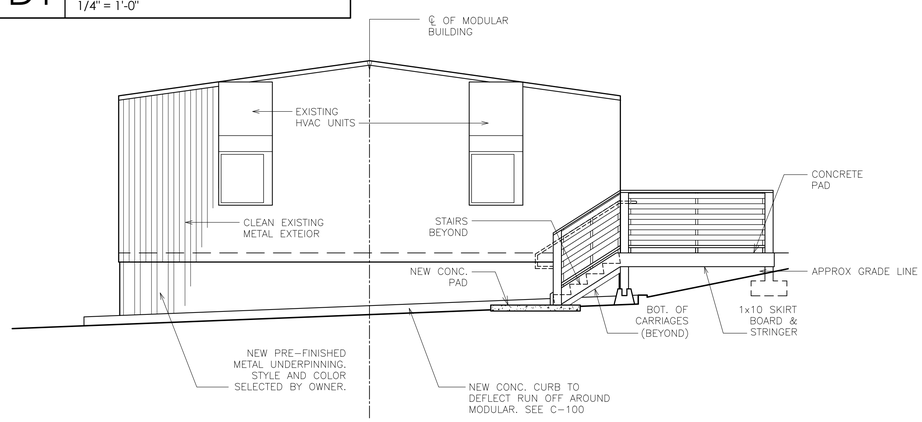

B1 WEST (LEFT) ELEVATION
1/4" = 1'-0"

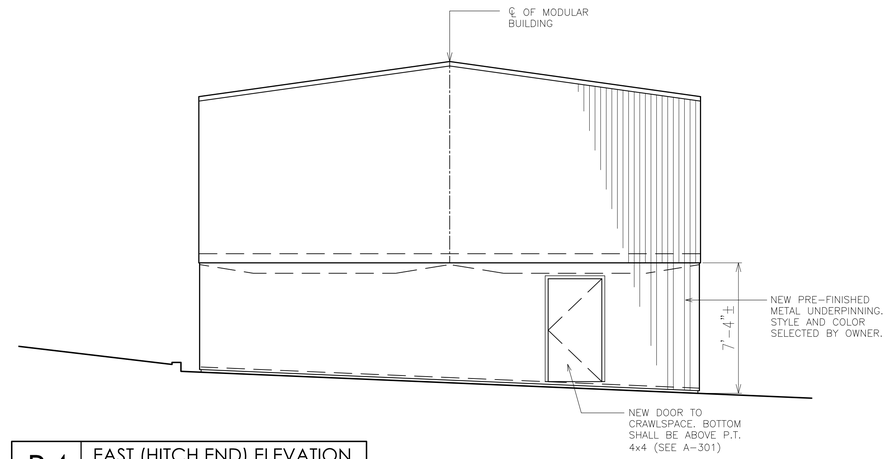

B4 EAST (HITCH END) ELEVATION
1/4" = 1'-0"

5-O-20-UR
Revised: 4/27/2020

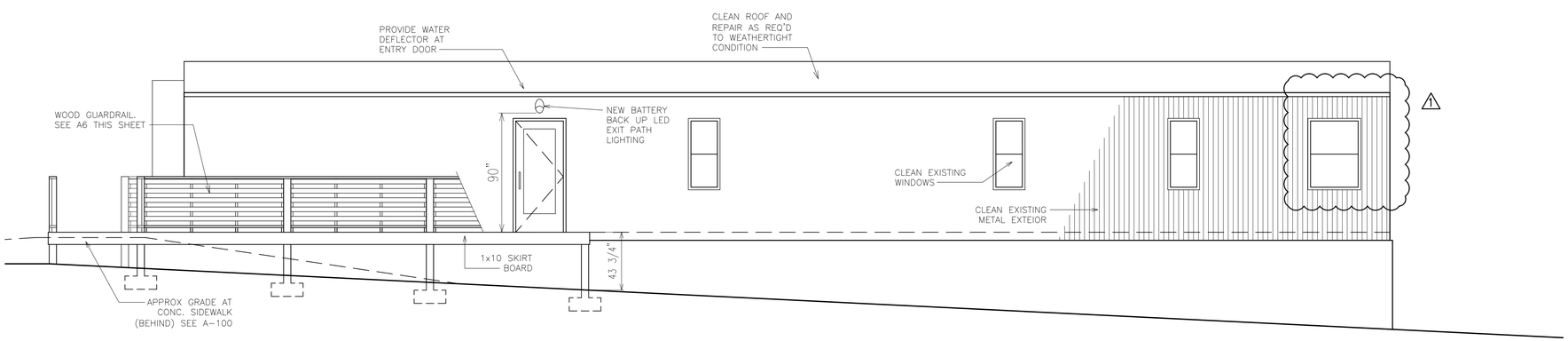

A1 SOUTH (FRONT) ELEVATION
1/4" = 1'-0"

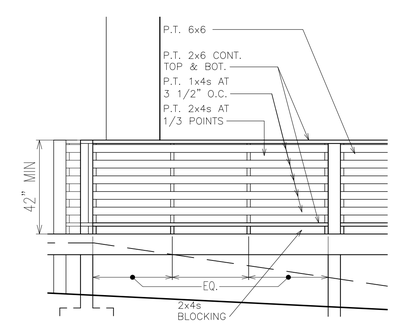

A6 GUARDRAIL DETAIL
1/4" = 1'-0"

FALCONNIER
DESIGN COMPANY
4622 Chambliss Avenue
Knoxville, TN 37919
Phone 865.584.7868
Fax 865.584.3139
faldesco@gmail.com
© copyright 2020

DAMON A. FALCONNIER
REGISTERED ARCHITECT
AGRICULTURE
COMMERCE
No. 02245
STATE OF TENNESSEE

CEDARBROOK OFFICE MODULAR BUILDING

WEST PARK BAPTIST CHURCH
8835 MIDDLEBROOK PIKE
KNOXVILLE, TN 37923

ELEVATIONS

AS INSTRUMENTS OF SERVICE, THESE DRAWINGS AND THE DESIGN REPRESENTED BY THEM ARE THE PROPERTY OF DAMON A. FALCONNIER AND AS SUCH ARE PROTECTED BY STATE AND FEDERAL COPYRIGHT LAWS. REPRODUCTION OR USE OF THESE DRAWINGS OTHER THAN FOR THE PROJECT INTENDED WITHOUT WRITTEN CONSENT FROM DAMON A. FALCONNIER IS PROHIBITED. UNAUTHORIZED USE WILL BE SUBJECT TO LEGAL ACTION.

DRAWN BY:	GHF
CHECKED BY:	DAF
ISSUED:	03/26/20
REVISION(S):	
1 04/01/20	2 ~
FILE:	2020-009

A-200

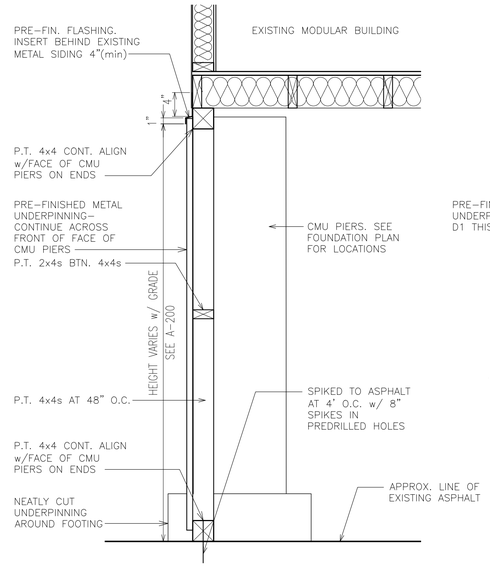

D1 UNDERPINNING END SECTION

1" = 1'-0"

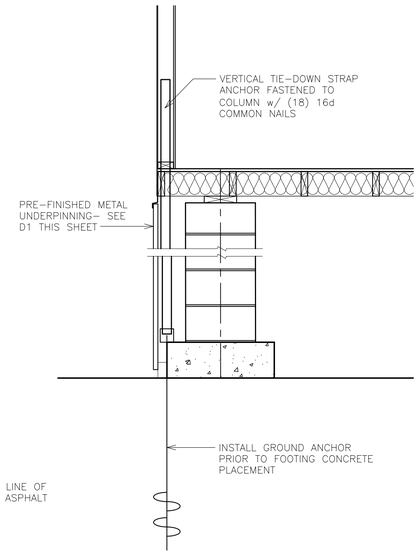

D2 END HOLD DOWN

3/4" = 1'-0"

STAIR NOTES:

1. DETERMINE VERTICAL HEIGHT OF STAIR IN FIELD BASED ON EXISTING GRADES. STAIR SHOULD BE LESS THAN 12'-0" TOTAL VERTICAL, NO INTERMEDIATE LANDING REQUIRED.
2. TREADS SHALL BE 11" + 1" NOSING
3. RISER HEIGHT SHALL NOT BE MORE THAN 7"

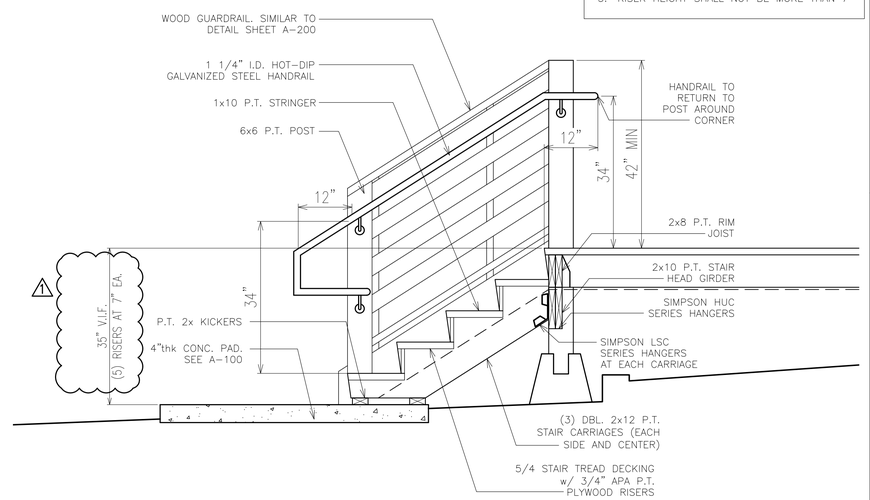

D6 STAIR DETAIL

3/4" = 1'-0"

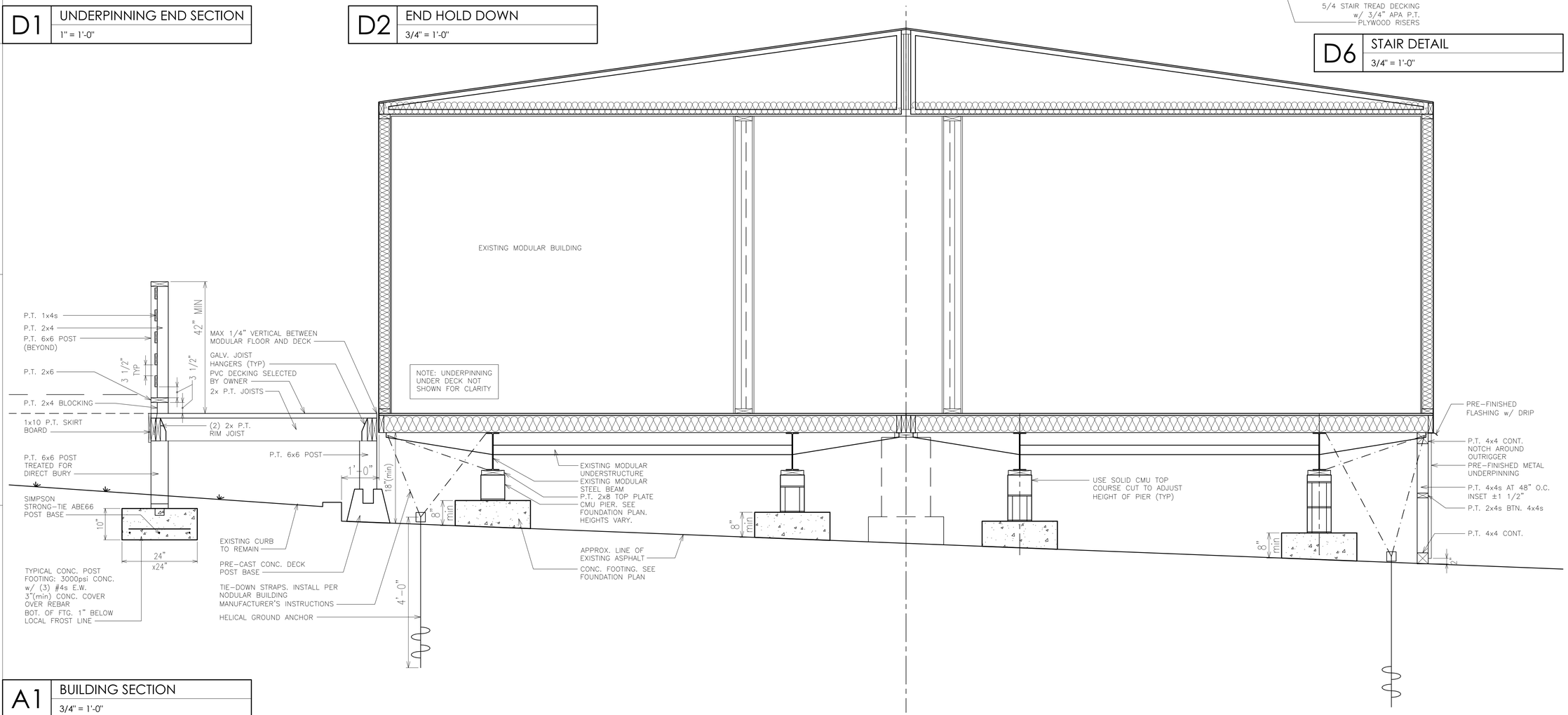

A1 BUILDING SECTION

3/4" = 1'-0"

FALCONNIER
DESIGN COMPANY

4622 Chambliss Avenue
Knoxville, TN 37919
Phone 865.584.7868
Fax 865.584.3139
faldesco@gmail.com

© copyright 2020

DAMON A. FALCONNIER REGISTERED ARCHITECT AGRICULTURE COMMERCE No. 02245 STATE OF TENNESSEE

6x6 P.T. POST

CEDARBROOK OFFICE MODULAR BUILDING

WEST PARK BAPTIST CHURCH
8835 MIDDLEBROOK PIKE
KNOXVILLE, TN 37923

BUILDING SECTION & DETIALS

AS INSTRUMENTS OF SERVICE, THESE DRAWINGS AND THE DESIGN REPRESENTED BY THEM ARE THE PROPERTY OF DAMON A. FALCONNIER AND AS SUCH ARE PROTECTED BY STATE AND FEDERAL COPYRIGHT LAWS. REPRODUCTION OR USE OF THESE DRAWINGS OTHER THAN FOR THE PROJECT INTENDED WITHOUT WRITTEN CONSENT FROM DAMON A. FALCONNIER IS PROHIBITED. UNAUTHORIZED USE WILL BE SUBJECT TO LEGAL ACTION.

DRAWN BY:	GHF
CHECKED BY:	DAF
ISSUED:	03/26/20
REVISION(S):	
1 04/01/20	2 ~
FILE:	2020-009

A-301

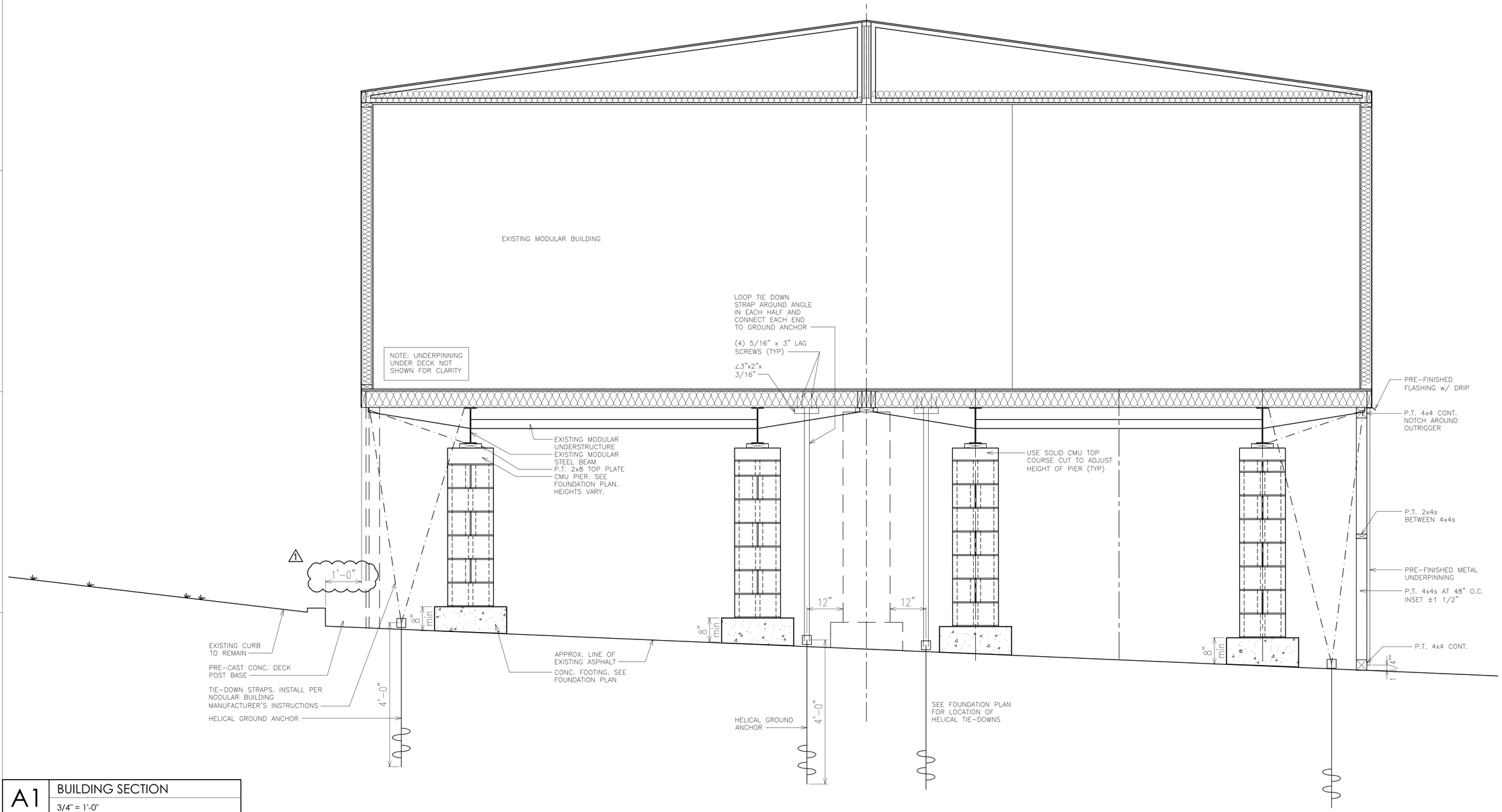

A1 BUILDING SECTION
3/4" = 1'-0"

FALCONNIER
DESIGN COMPANY

4622 Chambliss Avenue
Knoxville, TN 37919
Phone 865.584.7868
Fax 865.584.3139
faldesco@gmail.com

© copyright 2020

DAMON A. FALCONNIER
REGISTERED ARCHITECT
AGRICULTURE
COMMERCE
No. 02245
STATE OF TENNESSEE

CEDARBROOK OFFICE MODULAR BUILDING

WEST PARK BAPTIST CHURCH
8835 MIDDLEBROOK PIKE
KNOXVILLE, TN 37923

BUILDING SECTION

AS INSTRUMENTS OF SERVICE, THESE DRAWINGS AND THE DESIGN REPRESENTED BY THEM ARE THE PROPERTY OF DAMON A. FALCONNIER AND AS SUCH ARE PROTECTED BY STATE AND FEDERAL COPYRIGHT LAWS. REPRODUCTION OR USE OF THESE DRAWINGS OTHER THAN FOR THE PROJECT INTENDED WITHOUT WRITTEN CONSENT FROM DAMON A. FALCONNIER IS PROHIBITED. UNAUTHORIZED USE WILL BE SUBJECT TO LEGAL ACTION.

DRAWN BY:	GHF
CHECKED BY:	DAF
ISSUED:	03/26/20
REVISION(S):	
1 04/01/20	2 ~
FILE:	2020-009

A-302